AKAI SERVICE MANUAL

S700

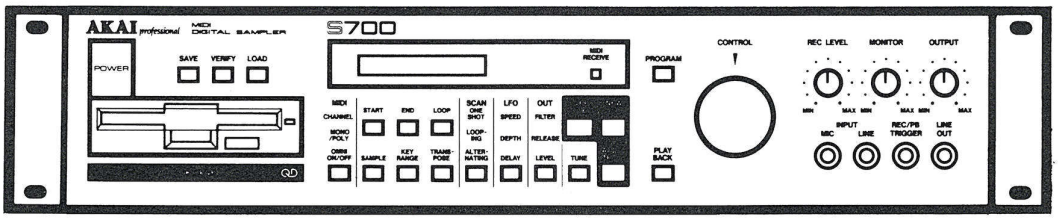

MIDI DIGITAL SAMPLER

MODEL S700

D RAM

MODEL ASK70

SPECIFICATIONS

System	12-bit sampling Sampling frequency: 4 kHz – 40 kHz Sampling time: 8 sec. – 0.8 sec. Frequency response: 25 Hz – 16 kHz No. of voices: 6 Range: 6 octaves
Storage	2.8-inch disk drive Memory capacity: 128 Kbyte (total of sides A and B) No. of tracks: 1 (spiral) Memory medium: 2.8-inch disk Medium lifespan: Approx. 2,000 passes Internal memory: 6 sample sounds (expandable to 16 using optional memory board)
Functions	Recording level: MIN – MAX Monitor level: MIN – MAX Output level: MIN – MAX Recording modes: New/overdub Editing section: Scan (start/end/loop) scan modes (one shot, loop, alternating, drum trigger, auto loop, reverse, forward) LFO: (speed, depth, delay) Output: (release, level, filter, velocity) Tune: (master tuning ± 100 cents, program tuning ± 100 cents) Transpose: (± 5 octaves, constant pitch on/ off) Key range: (MIDI notes 24 – 99) Auto trigger: (on/off, MIDI note number) Play key Samples: (1, 2, 3, 4, 5, 6) (16 when using optional memory board)
MIDI	MIDI channels (1 – 16) OMNI ON (special mono, mono, poly) OMNI OFF (special mono, mono, poly) MULTI mode (special mono, mono, poly)
Data	Save, verify, load
Display	LCD (liquid crystal display)
External jacks	MIDI (IN/OUT/THRU) MIC INPUT jack for audio trigger LINE INPUT jack for audio tirgger LINE OUTPUT jack (one each on front and rear)
Power requirements	120V, 60 Hz for USA and Canada 220V, 50 Hz for Europe except UK 240V, 50 Hz for UK and Australia
Dimensions	482.6 (W) × 88.1 (H) × 267 (D) mm
Front panel	2U/EIA rack mountable type
Weight	7 kg

* For improvement purposes, specifications and design are subject to change without notice.

★SAFETY INSTRUCTIONS

PRECAUTIONS DURING SERVICING

1. Parts identified by the ⚠ symbol parts are critical for safety. Replace only with parts number specified.
2. In addition to safety, other parts and assemblies are specified for conformance with such regulations as those applying to spurious radiation.
   These must also be replaced only with specified replacements.
   Examples: RF converters, tuner units, antenna selector switches, RF cables, noise blocking capacitors, noise blocking filters, etc.
3. Use specified internal wiring. Note especially:
   1) Wires covered with PVC tubing
   2) Double insulated wires
   3) High voltage leads
4. Use specified insulating materials for hazardous live parts. Note especially:
   1) Insulation Tape
   2) PVC tubing
   3) Spacers (Insulating Barriers)
   4) Insulation sheets for transistors
   5) Plastic screws for fixing microswitch (especially in turntable)
5. When replacing AC primary side components (transformers, power cords, noise blocking capacitors, etc.), wrap ends of wires securely about the terminals before soldering.

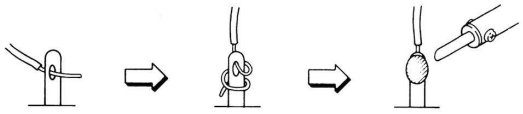

6. Observe that wires do not contact heat producing parts (heatsinks, oxide metal film resistors, fusible resistors, etc.).
7. Check that replaced wires do not contact sharp edged or pointed parts.
8. Also check areas surrounding repaired locatoins.
9. Use care that foreign objects (screws, solder droplets, etc.) do not remain inside the set.

SAFETY CHECK AFTER SERVICING

Confirm the specified insulation resistance between power cord plug prongs and externally exposed parts of the set is greater than 10 M ohms. but for equipment with external antenna terminals (tuner, receiver, etc.) and is intended for [C] or [A], specified insulation resistance should be headphone jacks line-in-out jacks etc. more than 2.2 M ohms (ground terminals, microphone jacks).

PRECAUTION FOR THE LITHIUM BATTERY

The LITHIUM BATTERY employed for memory Back up has a explosive probability when the BATTERY itself is excessive heated.

IN CASE OF REPLACING: RESOLDER and SOLDER AS RECOMMENDED WAY.

〔DANGER〕

〔RECOMMENDED WAY〕

★INFORMATION

SYMBOLS FOR PRIMARY DESTINATION

Alphabet indicates the destination of the units as listed below.

Symbols	Principal Destinations
[A]	USA
[B]	UK
[C]	Canada
[E]	Europe (except UK)
[J]	Japan
[S]	Australia
[V]	W. Germany only
[U]	Universal Area
[Y*]	Custom version

VOLTAGE CONVERSION

([E],[B],[S] Model only)

Before connecting the power cord. SET the VOLTAGE SELECTOR located on the rear panel with a screwdriver so that the correct voltage is indicated.

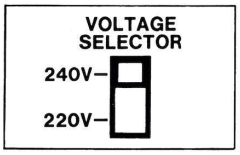

I. DISMANTLING OF UNIT

In case of trouble, etc. necessitating, please dismantle in the order shown in the photographs.
Reassemble in reverse order.

2. REMOVAL OF FRONT PANEL

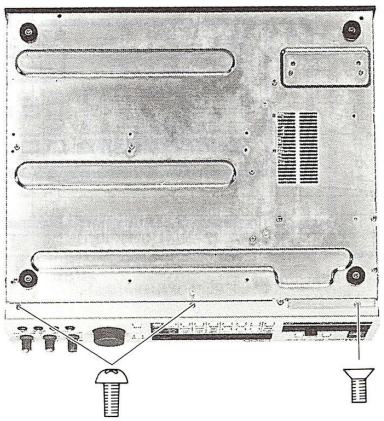

1. REMOVAL OF HANDLES AND UPPER COVER

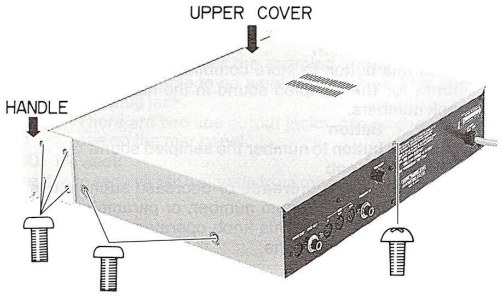

※ Also remove the same screws on other side.

3.

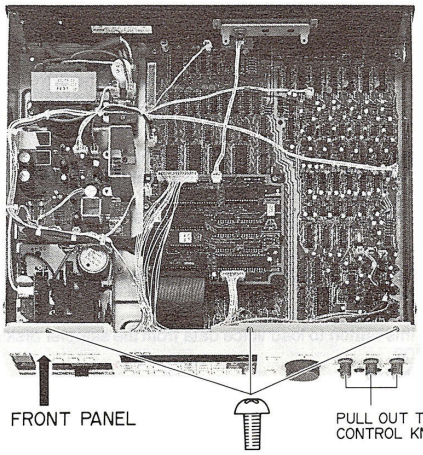

II. CONTROLS

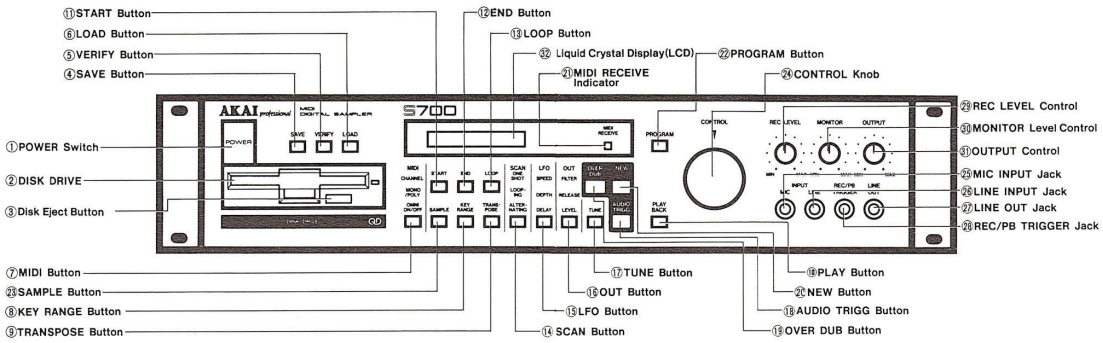

① **POWER Switch**
Use this switch to turn the S700's power on and off.
NOTE: Connect MIDI cables and external equipment before turning the power on.

② **DISK DRIVE**
This disk drive is exclusively for use with 2.8-inch sampler disks. (See Page 28)
NOTE: Insert the sampler disk straight into the drive, pushing gently until it stops. Inserting at a slant or handling roughly will reduce the life of the disk.

③ **Disk Eject Button**
Press this button to eject the sampler disk.
NOTE: When the disk appears, pull it straight out gently.

④ **SAVE Button**
Press this button to save S700 voice data onto the sampler disk.

⑤ **VERIFY Button**
Press this button to verify the voice data stored on the sampler disk.

⑥ **LOAD Button**
Press this button to load voice data from the sampler disk into the S700.

⑦ **MIDI Button**
Press this button to set the MIDI channel or to switch the MIDI mode.

⑧ **KEY RANGE Button**
Use this button to set the key range for the sampled sound.

⑨ **TRANSPOSE Button**
Press this button to set or transpose the pitch of the sampled sound.

⑩ **PLAY Button**
When this button is pressed, the sampled sound is played back. Use this for example when editing to check the voice.

⑪ **START Button**
Press this button to set the start point for playback of the sampled sound.

⑫ **END Button**
Press this button to set the end point for playback of the sampled sound.

⑬ **LOOP Button**
Press this button to set the looping splicing point of the sampled sound.

⑭ **SCAN Button**
Press this button to select the scanning mode for the sampled sound, either ONE SHOT, LOOPING, or ALTERNATING.

⑮ **LFO Button**
Press this button to set the speed, delay time, and depth of the vibrator effect applied to the sampled sound.

⑯ **OUT Button**
Press this button to set the output level, low-pass filter cut-off frequency, and release time.

⑰ **TUNE Button**
Press this button to tune the pitch of the sampled sound.

⑱ **AUDIO TRIGG Button**
Press this button to set the pitch and indicate that you wish to playback the sampled sound using external audio signals, for example from a mike or line.

⑲ **OVER DUB Button**
Press this button to sample while dubbing over various sounds.

⑳ **NEW Button**
Press this button to perform a new sampling. When this button is pressed, the previously sampled sound will be cleared.

㉑ **MIDI RECEIVE Indicator**
This button lights when MIDI signals have been received from a keyboard, sequencer, or other MIDI equipment.

㉒ **PROGRAM Button**
Press this button to store combinations of key range assigments for the sampled sound in the memory bank to recall bank numbers.

㉓ **SAMPLE Button**
Press this button to number the sampled sound.

㉔ **CONTROL Knob**
Use this knob to increase or decrease such values as the sample number, program number, or parameter, or to select modes (on/off, etc.). This knob operates in cooperation with the various mode buttons.

㉕ **MIC INPUT Jack**
Use this input jack to sample directly from a mike or guitar. This is a 6.3 mm ϕ phone plug jack with an input sensitivity of −60 dB.

㉖ **LINE INPUT Jack**
Use this input jack to perform sampling from the line out jack of a keyboard or other audio equipment. This is a 6.3 mm ϕ phone plug jack with an input sensitivity of −25 dB.
NOTE: When both the MIC and LINE input jacks are used, the MIC input is given priority.

㉗ **LINE OUT Jack**
This is an output jack for the sampled sound or the monitor sound. Connect it for example to an amplifier or mixer. This is a 6.3 mm ϕ phone plug jack.

㉘ **REC/PB TRIGGER Jack**
When a foot switch is connected to this jack, it can be used to begin sampling or for playback of the sampled sound.

㉙ **REC LEVEL Control**
Use this control to adjust the sampling recording level.

㉚ **MONITOR Level Control**
Use this control to adjust the monitor level during sampling or over dubbing.

㉛ **OUTPUT Control**
Use this control to adjust the line output level.
NOTE: This output level is not stored in the memory as part of the voice data. Also, this control does not affect the level of the monitor sound.

㉜ **Liquid Crystal display (LCD)**
This is a 16-character liquid crystal display, used to display various messages and parameters.

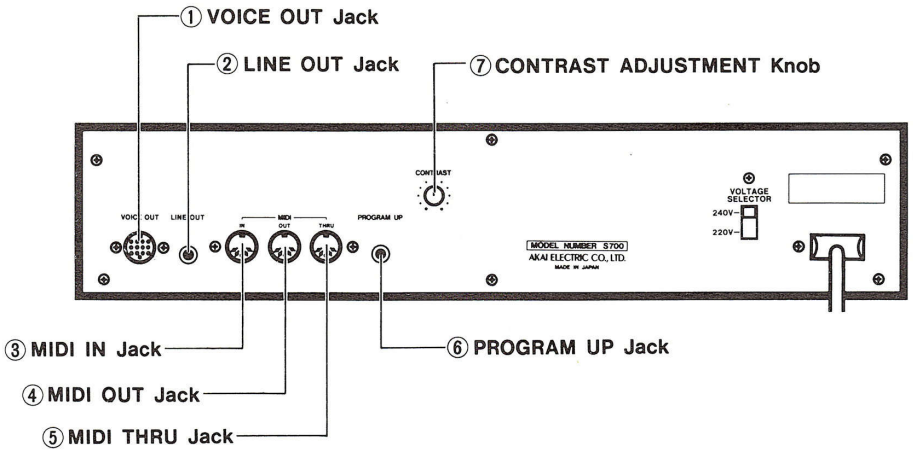

① **VOICE OUT Jack**
This is a 13-pin DIN jack from which 6 voice signals are output separately.

② **LINE OUT Jack**
This is an output jack for the sampled and monitor sound. Connect it for example to an amplifier or mixer. This is a 6.3 mm ϕ phone plug jack.
NOTE: There are two line output jacks, one on the front and one on the rear panel.

③ **MIDI IN Jack**
Use this to receive MIDI signals from other MIDI equipment.

④ **MIDI OUT Jack**
This MIDI OUT Jack is exclusively for use with MIDI systems.

⑤ **MIDI THRU Jack**
MIDI signals input to the MIDI IN Jack will be output unchanged from this jack.

⑥ **PROGRAM UP Jack**
Use this jack for connection to a foot switch. When the foot switch is operated, the program number will increase.

⑦ **CONTRAST Adjustment Knob**
Use this knob to adjust the brightness of the liquid crystal display. Adjust according to the lighting conditions under which the S700 is operated.

III. CONNECTIONS

The S700 is a MIDI digital sampler which is operated by data received at the MIDI IN Jack or external audio signals. In order to take full advantage of all the features and functions of your S700, use a MIDI keyboard which handles key velocity data (the AKAI MX73, AX73, or AX80 for example). Of course, MIDI keyboards which do not handle key velocity data can also be used.

Figure 1

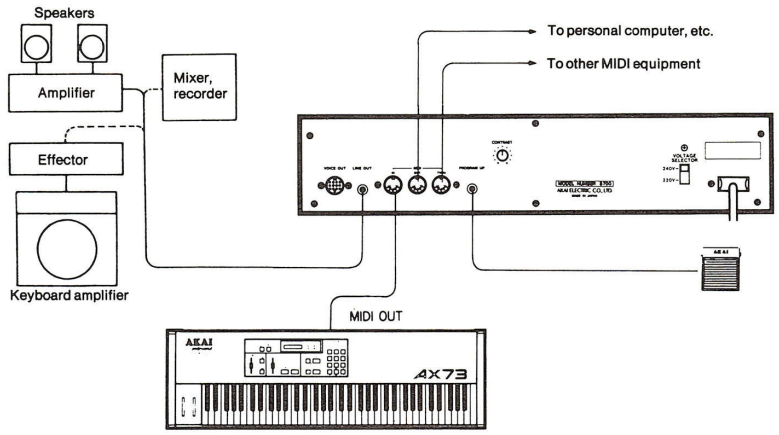

Figure 2

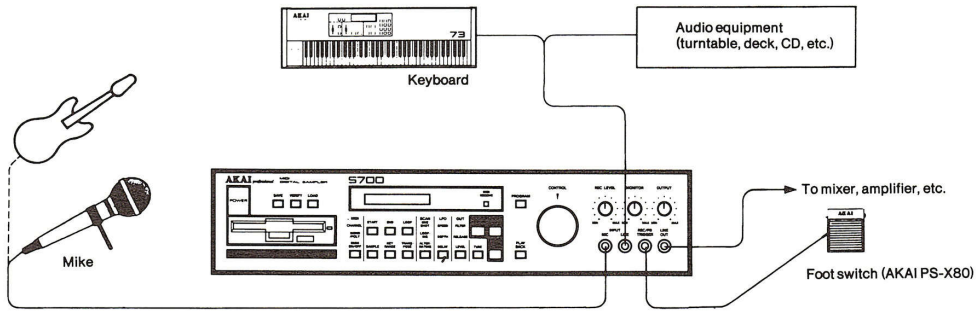

IV. PRINCIPAL PARTS LOCATION

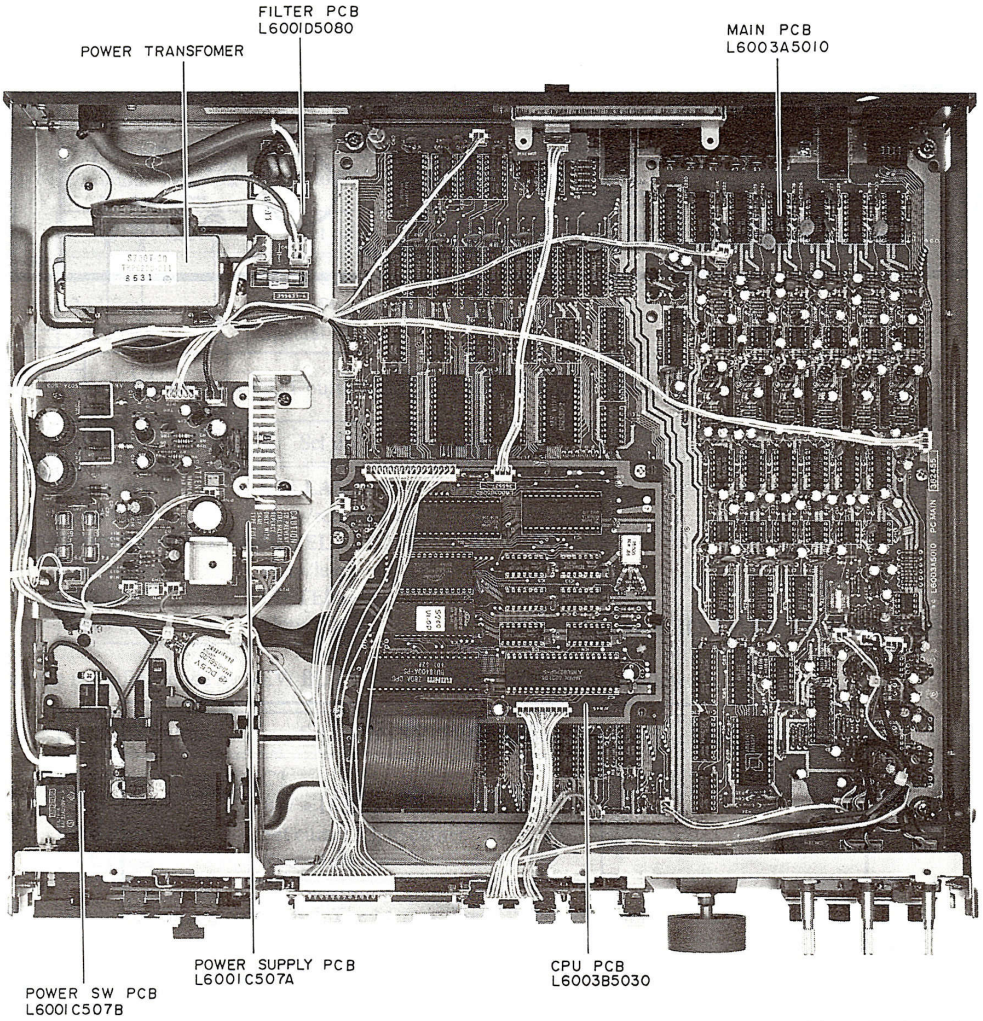

Fig. 3-1. Top View

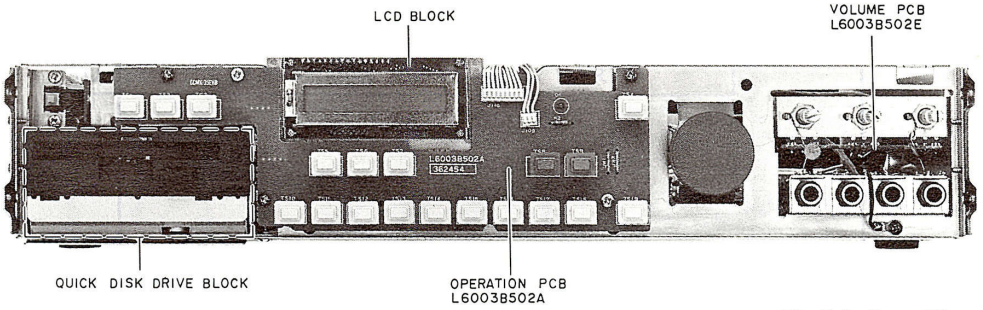

Fig. 3-2. Front View

V. ADJUSTMENT

5-1. INSTRUMENT CONNECTION

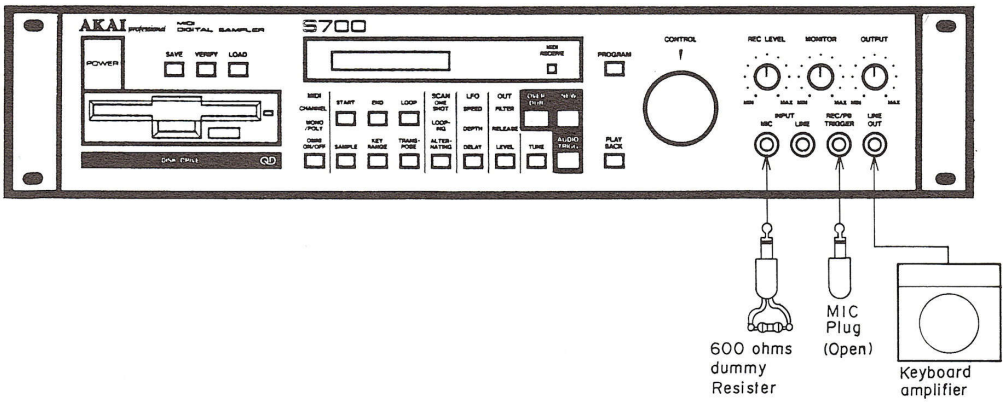

Fig. 5-1. Instrument Connection

5-2. OFF-SET ADJUSTMENT OF EACH VOICE

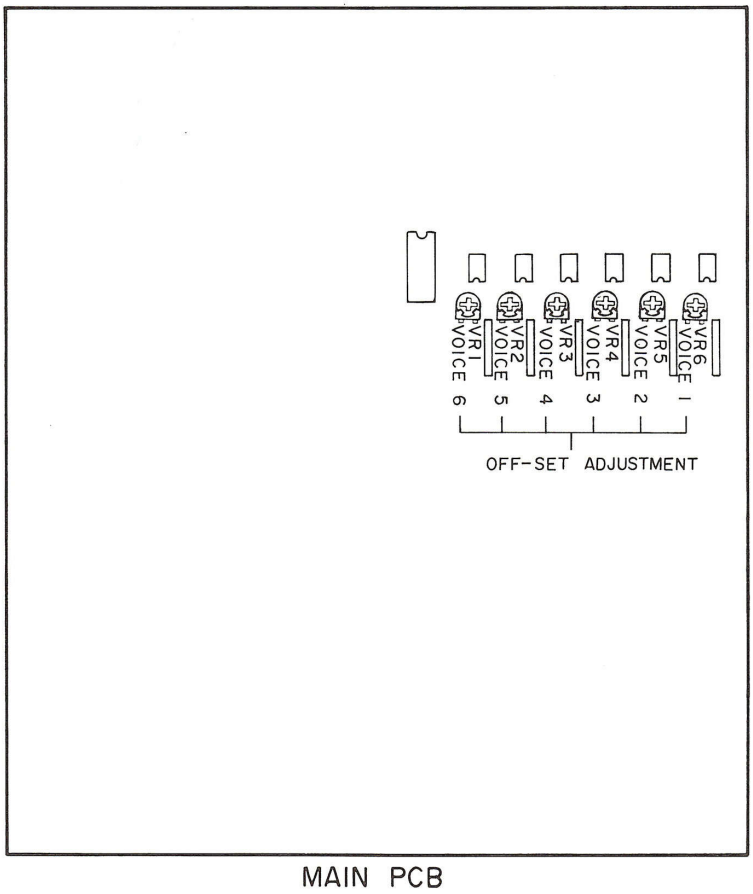

Fig. 5-2. MAIN PCB Adjustment points

1) Connect the 600 ohms dummy plug to MIC and only the Mic plug (open) to REC/PB TRIGGER on the front panel. (Refer to Fig. 5-1.)
2) Set the following controls on the front panel as below.
   REC LEVEL ..... MAX position
   MONITOR ..... MIN position
   OUTPUT ..... MAX position
3) Set up MIDI mode by MIDI button and CNTROL knob as follow.

MIDI button	Set up by CONTROL knob
1st Press	MIDI CHANNEL = 1
2nd Press	Multi Program
3rd Press	Special Mono

4) Set up the OUTPUT mode by OUT button and CONTROL knob as follow.

OUTPUT button	Set up by CONTROL knob
1st Press	RELEASE = 30
2nd Press	vlcty/release = 0
3rd Press	LEVEL = 75
4th Press	vlcty/level = 0
5th Press	FILTER = 99
6th Press	vlcty/Fltr = 0

5) Set up the recording mode by NEW BUTTON and CONTROL knob as follow.

NEW button	Set up by CONTROL knob
1st Press	C3
2nd Press	BW = 16 kHz
3rd Press	Set cursol (□) to center
4th Press	Recording start

NOTE: When recording is completed, The LCD will read "Recording done".

6) Press NEW button and SAMPLE button next then set to S2 by CONTROL knob and repeat 5).
7) Repeat steps 5) and 6) until S6 (VOICE 6) is recording.
8) Press RPOGRAM button and select P1:S1:–:–:–:– by CONTROL knob and adjust VR6 (VOICE 1 OFF-SET) so that the click noise from the monitor speaker is minimum, When Press the PLAY BACK button on the front panel.
9) Select the VOICE NO. by CONTROL knob and adjust VOICE 2 to VOICE 6 as same maner as in step 8).

VOICE NO.	LCD	ADJUSTMENT PART
VOICE 2	P2:S–:2:–:–:–:–	VR5
VOICE 3	P3:S–:–:3:–:–:–	VR4
VOICE 4	P4:S–:–:–:4:–:–	VR3
VOICE 5	P5:S–:–:–:–:5:–	VR2
VOICE 6	P6:S–:–:–:–:–:6	VR1

VI. MIDI IMPLEMENTATION CHART

[MIDI 6 VOICE DIGITAL SAMPLER]

Model S700 MIDI Implementation Chart Version: 1.0

Function ...	Transmitted	Recognized	Remarks
Basic Channel Default	×	1	
Basic Channel Changed	×	1 – 16	
Mode Default	×	Mode 1	
Mode Messages	×	Omni on/off, P/M	Omni on/off, P/M
Mode Altered	**********	×	
Note Number : True voice	×	0 – 127	
	**********	24 – 96	
Velocity Note ON	×	○ 9n V = 1 – 127	
Velocity Note OFF	×	○ 9n V = 0 or 8n H V = 0 – 127	8n H: Velocity release
After Touch Key's	×	×	
After Touch Ch's	×	○	
Pitch Bender	×	○	± 12 Semi tone 7 bit Reso
Control Change 1	×	○	Modulation wheel
Control Change 7	×	○	Sustain foot SW
Control Change 64	×	○	
Prog Change : True #	×	0	
	**********	0 – 31	
System Exclusive	○	○	ID: 47 Sampling data
System Common : Song Pos	×	×	
System Common : Song Sel	×	×	
System Common : Tune	×	×	
System Real Time : Clock	×	×	
System Real Time : Commands	×	×	
Aux Messages : Local ON/OFF	×	×	
Aux Messages : All Notes OFF	×	○ (123)	
Aux Messages : Active Sense	×	×	
Aux Messages : Reset	×	×	
Notes			

Mode 1: OMNI ON, POLY
Mode 2: OMNI ON, MONO
Mode 3: OMNI OFF, POLY
Mode 4: OMNI OFF, MONO

○: Yes
×: No

VII. PARTS LIST

ATTENTION

1. **When placing an order for parts, be sure to list Part No., Model No. and the description of each part. Otherwise, the non-delivery of the part or the delivery of a wrong part may result.**
2. **Please make sure that Part No. is correct when ordering.**
   If not, a part different from the one you ordered may be delivered.
3. **Since the parts shown in Parts List of Preliminary Service Manual may have been the subject of changes, please use this Parts List for all future reference.**

HOW TO USE THIS PARTS LIST

1. This Parts List lists those parts which are considered necessary for repairs. Other common parts, such as resistors and capacitors, are listed in the "Common List for Service Parts" from which these parts should be selected and stocked.
2. The Recommended Spare Parts List shows those parts in the Parts List which are considered particularly important for service.
3. Parts not shown in the Parts List and "Common List for Service Parts" will not in principle be supplied.
4. How to read the Parts List.

a) Mechanism Block

2. HEAD BASE BLOCK

REF. NO.	PART NO.	DESCRIPTION
2-1x	BH-T2023A320A	HEAD BASE BLOCK
2-2	HP-H2206A010A	HEAD R/P PR4-8FU C
2-3	ZS-477876	PAN20×03STL CMT
2-4	ZS-536488	BID20×08STL CMT
2-5	ZG-402895	SP CS ANGLE ADJUST

SP (Service Parts) Classification

A small "x" indicates that this part is not shown in the Photo or Illustration.

This number corresponds with the individual parts index number in that figure.

This number corresponds with the Figure Number.

b) PC Board

6. MAIN PC BOARD

REF. NO.	PART NO.	DESCRIPTION
6-IC1	EI-324536	IC HD14049BP
6-IC2	EI-336801	IC MB8841-564M
6-C1A	EC-338399	C MMY V 223M 250AC [U,E,B,S]
6-C1B	EC-350949	C MMY V 223M 250DC [J]
6-C1C	EC-338397	C MMY V 223M 125AC [C,A]
6-X1	EI-318384	OSC X'TAL NC-18C

Symbols for primary destination

[A]: AAL(U.S.A.) [S]: SAA(Australia)
[B]: BEAB(England) [U]: U/T(Universal Area)
[C]: CSA(Canada) [V]: VDE(W. Germany)
[E]: CEE(Europe) [Y]: Custom Version
[J]: JPN(Japan)

SP (Service Parts) Classification

These reference symbols correspond with component symbols in the Schematic Diagrams.

The available PC Board Blocks are listed separately.

5. When Part No. is known, Parts Index at end of Parts List can be used to locate where that part is shown in Parts List by its Reference No. listed at right of Part No.

WARNING

⚠ (*) INDICATES SAFETY CRITICAL COMPONENTS. FOR CONTINUED SAFETY, REPLACE SAFETY CRITICAL COMPONENTS ONLY WITH MANUFACTURE'S RECOMMENDED PARTS.

AVERTISSEMENT

⚠ (*) IL INDIQUE LES COMPOSANTS CRITIQUES DE SÉCURITÉ. POUR MAINTENIR LE DEGRÉ DE SÉCURITÉ DE L'APPAREIL, NE REMPLACER QUE DES PIÉCES RECOMMANDEES PAR LÉ FABRICANT.

S700

1. RECOMMENDED SPARE PARTS

Ref. No.	Part No.	Description
1	*BT-366080	TRANS POWER S700T-10 (J)
2	*BT-366081	TRANS POWER S700T-30 (C,A)
3	*BT-366082	TRANS POWER S700T-50 (E,V,B,S)
4	ED-719017	D LED ASSY
5	ED-359534	D LED SLH-34VC3F-R RED
6	*ED-330319	D SILICON DBA10B 100/1.0A
7	*ED-200213	D SILICON DBA40C-K15 200/2.6A
8	*ED-361055	D SILICON DS135E-UB1
9	ED-301911	D SILICON H DS448
10	ED-713919	D SILICON 1SS178
11	ED-343996	D ZENER H HZ12 B1
12	ED-331626	D ZENER H HZ3 B2
13	ED-337267	D ZENER H HZ4 A1
14	ED-706268	D ZENER H RD3.3E B1
15	*EF-306949	FUSE TSC A 250V 1.25A [J]
16	*EF-306952	FUSE TSC A 250V 4.00A [J]
17	*EF-306124	FUSE TSC A 250V 630MA [J]
18	*EF-308847	FUSE TSC 125V 1.60A [C,A]
19	*EF-306957	FUSE TSC 125V 4.00A [C,A]
20	*EF-305703	FUSE TSC 125V 630MA [C,A]
21	*EF-691007	FUSE SEMKO T 250V 3.15A [E,V,S]
22	*EF-593706	FUSE SEMKO T 250V 500MA [E,V,S]
23	*EF-359225	FUSE BET T 250V 3.15A [B]
24	*EF-355374	FUSE BET T 250V 500MA [B]
25	EI-360049	IC AM2504PC
26	EI-354283	IC BA6110
27	EI-390060	IC BA9201
28	EI-360050	IC BA9221
29	EI-366122	IC BU18400A-PS
30	EI-360045	IC DG211CJ
31	EI-719023	IC FD7201P
32	EI-360954	IC IR9311
33	EI-366119	IC MB87013
34	EI-366126	IC MB8863NM-G
35	EI-366121	IC MB89251AP-G
36	EI-372103	IC MB89254
37	EI-360046	IC MF10CCN
38	EI-360058	IC MF6CN-50
39	EI-362553	IC MN41464-12
40	EI-366112	IC M5L8279P-5
41	EI-349719	IC M5218P
42	EI-360043	IC M5220P
43	EI-360565	IC M5223P
44	EI-359552	IC M5236L
45	EI-362588	IC M5238P
46	EI-307789	IC NJM4560D
47	EI-359626	IC NJM78M15A
48	EI-359628	IC NJM79M15A
49	EI-364253	IC PST520D-2
50	EI-371695	IC TC5565PL-15
51	EI-360040	IC TC74HCU04P
52	EI-360037	IC TC74HC00P
53	EI-360038	IC TC74HC02P
54	EI-360026	IC TC74HC04P
55	EI-360039	IC TC74HC08P
56	EI-360025	IC TC74HC138P
57	EI-360035	IC TC74HC157P
58	EI-360048	IC TC74HC173P
59	EI-360054	IC TC74HC174P
60	EI-360053	IC TC74HC175P
61	EI-360029	IC TC74HC244P
62	EI-360032	IC TC74HC245P
63	EI-360042	IC TC74HC259P
64	EI-360036	IC TC74HC32P
65	EI-360030	IC TC74HC373P
66	EI-360047	IC TC74HC374P
67	EI-360031	IC TC74HC4040P
68	EI-371144	IC TC74HC540P
69	EI-365830	IC TC74HC670P
70	EI-360028	IC TC74HC74P
71	EI-360027	IC TC74HC86P
72	EI-367554-C	IC TMM27128AD-20-S700 V1.2
73	EI-372008	IC TMP82C37AP-5
74	EI-354197	IC UPC311C
75	EI-354146	IC UPD8253C-2
76	EI-365528	OSC X'TAL NR-18 16.000000HZ
77	EI-366130	OSC X'TAL NR-18 6.5MHZ
78	EM-371166	IND LCD EDM-CC161373-C
79	*EO-360068	COIL LF LF-2 B
80	EQ-348929	RELAY SIG G5A-237P 2TR 12V
81	*ER-326169	R FUSE ERD2FC S10 1/4W 22R0G
82	*ER-331188	R FUSE ERD2FC S10 1/4W 8R2J
83	*ES-344270	SW PUSH SDLD1P003 01-1
84	ES-719025	SW SKELETON SKD-BR
85	ES-719026	SW SKELETON SKD-BRL
86	*ES-306430	SW SLIDE J-S4013#01 01-2
87	ES-365851	SW TACT SPPQ19
88	ET-354167	DETECTOR PC900
89	ET-360646	TR DTA143ES F05
90	ET-364060	TR DTC143ES
91	ET-308867	TR 2SA1015 O,Y,GR
92	ET-353899	TR 2SA1317 S,T,U
93	ET-338447	TR 2SA991 E,F
94	ET-360687	TR 2SB1015 Y,GR
95	ET-356817	TR 2SB891 Q,R
96	ET-316523	TR 2SC1844 F
97	ET-349883	TR 2SC3243 D,E F05
98	ET-360067	TR 2SC3330 T,U F05
99	ET-354083	TR 2SD1189 Q,R
100	ET-719024	TR 2SD773
101	EV-359551	VR ROTARY 16P10 A502
102	EV-361200	VR ROTARY 16P10 B502
103	EV-370917	VR VB12L7X5PH2JN15CK B202
104	EZ-370918	ROTARY ENCORDER EC16B W/C 24P

2. QUICK DISK D281-R69-500

Ref. No.	Part No.	Description
2-1	BB-366056	QUICK DISK D281-R69-5050
2-2	MZ-719014	DISK HOLDER ASSY
2-3	BA-719015	PC DISK BLK
2-5	BD-719016	PANEL FRONT
2-6	ED-719017	D LED ASSY
2-8	SB-719018	BUTTON EJECT
2-9	ZG-719019	SP EJECT PLATE
2-10	BS-719020	SW SKELETON MEDIA ASSY
2-11	ZG-719022	SP COIL
2-18	AX-717097	PAD HEAD
2-19	MZ-719424	PROTECTOR HEAD QDD S700

FINAL ASSEMBLY BLOCK

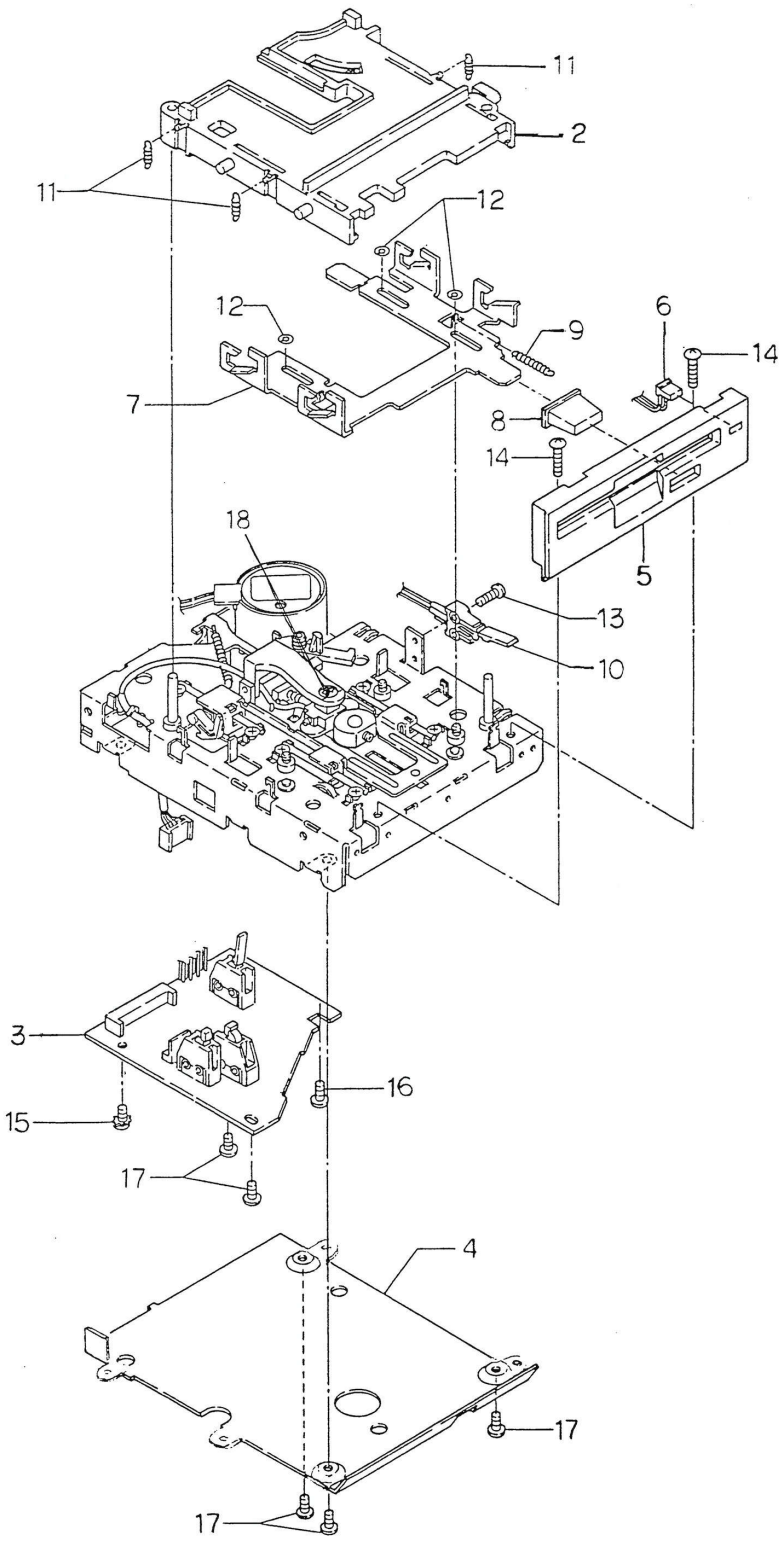

3. P.C BOARD BLOCK

Ref. No.	Part No.	Description
3-1	BA-L6003A030A	PC MAIN BLK S700(J)
3-2	BA-L6003A040A	PC CPU BLK S700
3-3	BA-L6003A020A	PC(#) OPERATION BLK S700
3-4	BA-719015	PC DISK BLK

NOTE: PC OPERATION BLK CONSISTS OF FOLLOWING P.C BOARD
* OPERATION P.C BOARD
* PHONE P.C BOARD
* PHONE P.C BOARD
* VOLUME P.C BOARD
* VOLUME P.C BOARD

4. DISK P.C BOARD

Ref. No.	Part No.	Description
4-D1	ED-713919	D SILICON 1SS178
4-D2	ED-713919	D SILICON 1SS178
4-D3	ED-706268	D ZENER H RD3.3E B1
4-IC1	EI-307789	IC NJM4560D
4-IC2	EI-354197	IC UPC311C
4-IC3	EI-719023	IC FD7201P
4-SW1	ES-719025	SW SKELETON SKD-BR
4-SW2	ES-719026	SW SKELETON SKD-BRL
4-SW3	ES-719025	SW SKELETON SKD-BR
4-TR1	ET-308867	TR 2SA1015 O,Y,GR
4-TR2	ET-364060	TR DTC143ES
4-TR3	ET-364060	TR DTC143ES
4-TR4	ET-719024	TR 2SD773
4-TR6	ET-364060	TR DTC143ES

5. MAIN P.C BOARD

Ref. No.	Part No.	Description
5-D2	ED-301911	D SILICON H DS448
5-D3	ED-301911	D SILICON H DS448
5-D4	ED-301911	D SILICON H DS448
5-D6	ED-301911	D SILICON H DS448
5-D7	ED-301911	D SILICON H DS448
5-D8	ED-301911	D SILICON H DS448
5-D9	ED-301911	D SILICON H DS448
5-FR1	*ER-326169	R FUSE ERD2FC S10 1/4W 22R0G
5-FR2	*ER-331188	R FUSE ERD2FC S10 1/4W 8R2J
5-IB1	EH-359185	COMP R RKC1/8B8 103J
5-IB2	EH-359185	COMP R RKC1/8B8 103J
5-IB3	EH-359185	COMP R RKC1/8B8 103J
5-IB4	EH-359185	COMP R RKC1/8B8 103J
5-IC1	EI-360031	IC TC74HC4040P
5-IC2	EI-360038	IC TC74HC02P
5-IC3	EI-360030	IC TC74HC373P
5-IC4	EI-360026	IC TC74HC04P
5-IC5	EI-371144	IC TC74HC540P
5-IC6	EI-360031	IC TC74HC4040P
5-IC7	EI-360032	IC TC74HC245P
5-IC8	EI-360036	IC TC74HC32P
5-IC9	EI-360026	IC TC74HC04P
5-IC10	EI-360037	IC TC74HC00P
5-IC11	EI-360036	IC TC74HC32P
5-IC12	EI-360028	IC TC74HC74P
5-IC13	EI-360029	IC TC74HC244P
5-IC14	EI-360039	IC TC74HC08P
5-IC15	EI-360037	IC TC74HC00P
5-IC16	EI-360036	IC TC74HC32P
5-IC17	EI-360026	IC TC74HC04P
5-IC18	EI-360037	IC TC74HC00P
5-IC19	EI-360028	IC TC74HC74P
5-IC20	EI-360028	IC TC74HC74P
5-IC21	EI-372008	IC TMP82C37AP-5
5-IC22	EI-372008	IC TMP82C37AP-5
5-IC23	EI-360025	IC TC74HC138P
5-IC24	EI-360036	IC TC74HC32P
5-IC25	EI-360027	IC TC74HC86P
5-IC26	EI-360027	IC TC74HC86P
5-IC27	EI-360025	IC TC74HC138P
5-IC28	EI-360026	IC TC74HC04P
5-IC29	EI-360054	IC TC74HC174P
5-IC30	EI-372103	IC MB89254
5-IC31	EI-372103	IC MB89254
5-IC32	EI-354146	IC UPD8253C-2
5-IC33	EI-354146	IC UPD8253C-2
5-IC34	EI-360054	IC TC74HC174P
5-IC35	EI-365830	IC TC74HC670P
5-IC36	EI-365830	IC TC74HC670P
5-IC37	EI-360035	IC TC74HC157P
5-IC38	EI-360035	IC TC74HC157P
5-IC39	EI-360053	IC TC74HC175P
5-IC40	EI-360054	IC TC74HC174P
5-IC41	EI-362553	IC MN41464-12
5-IC42	EI-362553	IC MN41464-12
5-IC43	EI-362553	IC MN41464-12
5-IC44	EI-362553	IC MN41464-12
5-IC45	EI-362553	IC MN41464-12
5-IC46	EI-362553	IC MN41464-12
5-IC47	EI-362553	IC MN41464-12
5-IC48	EI-362553	IC MN41464-12
5-IC49	EI-362553	IC MN41464-12
5-IC50	EI-366126	IC MB8863NM-G
5-IC51	EI-360025	IC TC74HC138P
5-IC52	EI-360025	IC TC74HC138P
5-IC53	EI-360042	IC TC74HC259P
5-IC56	EI-360037	IC TC74HC00P
5-IC57	EI-360037	IC TC74HC00P
5-IC58	EI-360048	IC TC74HC173P
5-IC59	EI-360049	IC AM2504PC
5-IC61	EI-360046	IC MF10CCN
5-IC62	EI-360043	IC M5220P
5-IC63	EI-349719	IC M5218P
5-IC64	EI-360047	IC TC74HC374P
5-IC65	EI-360050	IC BA9221
5-IC66	EI-360045	IC DG211CJ
5-IC67	EI-360954	IC IR9311
5-IC68	EI-362588	IC M5238P
5-IC69	EI-360045	IC DG211CJ
5-IC70	EI-360045	IC DG211CJ
5-IC71	EI-360045	IC DG211CJ
5-IC72	EI-349719	IC M5218P
5-IC73	EI-362588	IC M5238P
5-IC74	EI-362588	IC M5238P
5-IC75	EI-362588	IC M5238P
5-IC76	EI-362588	IC M5238P
5-IC77	EI-362588	IC M5238P
5-IC78	EI-362588	IC M5238P
5-IC79	EI-360058	IC MF6CN-50
5-IC80	EI-360058	IC MF6CN-50
5-IC81	EI-360058	IC MF6CN-50
5-IC82	EI-360058	IC MF6CN-50
5-IC83	EI-360058	IC MF6CN-50
5-IC84	EI-360058	IC MF6CN-50
5-IC85	EI-354283	IC BA6110
5-IC86	EI-354283	IC BA6110
5-IC87	EI-354283	IC BA6110
5-IC88	EI-354283	IC BA6110
5-IC89	EI-354283	IC BA6110
5-IC90	EI-354283	IC BA6110
5-IC91	EI-360050	IC BA9221
5-IC92	EI-360565	IC M5223P
5-IC93	EI-360565	IC M5223P
5-IC94	EI-360565	IC M5223P
5-IC95	EI-360565	IC M5223P
5-IC96	EI-360565	IC M5223P
5-IC97	EI-360565	IC M5223P
5-IC98	EI-360030	IC TC74HC373P
5-IC99	EI-390060	IC BA9201
5-IC100	EI-390060	IC BA9201

Ref. No.	Part No.	Description
5-IC101	EI-390060	IC BA9201
5-IC102	EI-390060	IC BA9201
5-IC103	EI-390060	IC BA9201
5-IC104	EI-390060	IC BA9201
5-J1	EJ-364322	PHONE J 2P HLJ0520-110 W/NUT
5-J2	EJ-364256	DIN J M1704 3P
5-J3	EJ-364322	PHONE J 2P HLJ0520-110 W/NUT
5-J4	EJ-360771	DIN J TCS5037-01-241 13P
5-PH1	ET-354167	DETECTOR PC900
5-P1	EW-367384	WIRE ASSY S700 J104 40P
5-RL1	EQ-348929	RELAY SIG G5A-237P 2TR 12V
5-TR1	ET-360067	TR 2SC3330 T,U F05
5-TR2	ET-360067	TR 2SC3330 T,U F05
5-TR3	ET-360067	TR 2SC3330 T,U F05
5-TR4	ET-353899	TR 2SA1317 S,T,U
5-TR5	ET-353899	TR 2SA1317 S,T,U
5-TR6	ET-353899	TR 2SA1317 S,T,U
5-TR7	ET-353899	TR 2SA1317 S,T,U
5-TR8	ET-353899	TR 2SA1317 S,T,U
5-TR9	ET-353899	TR 2SA1317 S,T,U
5-TR10	ET-338447	TR 2SA991 E,F
5-TR11	ET-316523	TR 2SC1844 F
5-TR12	ET-316523	TR 2SC1844 F
5-TR13	ET-338447	TR 2SA991 E,F
5-TR14	ET-360646	TR DTA143ES F05
5-VR1	EV-357619	R S-FIX H RH0615C15J 3P 104
5-VR2	EV-357619	R S-FIX H RH0615C15J 3P 104
5-VR3	EV-357619	R S-FIX H RH0615C15J 3P 104
5-VR4	EV-357619	R S-FIX H RH0615C15J 3P 104
5-VR5	EV-357619	R S-FIX H RH0615C15J 3P 104
5-VR6	EV-357619	R S-FIX H RH0615C15J 3P 104

6. CPU P.C BOARD

Ref. No.	Part No.	Description
6-D1	ED-301911	D SILICON H DS448
6-D2	ED-337267	D ZENER H HZ4 A1
6-IC1	EI-366119	IC MB87013
6-IC2	EI-366112	IC M5L8279P-5
6-IC3	EI-366121	IC MB89251AP-G
6-IC4	EI-371695	IC TC5565PL-15
6-IC5	EI-360037	IC TC74HC00P
6-IC6	EI-360025	IC TC74HC138P
6-IC7	EI-360036	IC TC74HC32P
6-IC8	EI-367554-C	IC TMM27128AD-20-S700 V1.2
6-IC9	EI-360031	IC TC74HC4040P
6-IC10	EI-364253	IC PST520D-2
6-IC11	EI-366122	IC BU18400A-PS
6-IC12	EI-360040	IC TC74HCU04P
6-IC13	EI-360038	IC TC74HC02P
6-P6	EJ-365932	CONNECTOR HDB0001-01-2131 25P
6-R13	*ER-363911	R OMF H S15 FS 2W 220J
6-TR1	ET-349883	TR 2SC3243 D,E F05
6-X1	EI-366130	OSC X'TAL NR-18 6.5MHZ
6-X2	EI-365528	OSC X'TAL NR-18 16.000000HZ
6-1	EJ-358691	SOCKET IC DILB28P-8J

7. POWER SUPPLY P.C BOARD

Ref. No.	Part No.	Description
7-D1	*ED-200213	D SILICON DBA40C-K15 200/2.6A
7-D2	ED-361055	D SILICON DS135E-UB1
7-D4	*ED-330319	D SILICON DBA10B 100/1.0A
7-D5	ED-331626	D ZENER H HZ3 B2
7-D6	*ED-343996	D ZENER H HZ12 B1
7-D7	ED-301911	D SILICON H DS448
7-D10	*ED-361055	D SILICON DS135E-UB1
7-D11	*ED-361055	D SILICON DS135E-UB1
7-IC1	*EI-359552	IC M5236L
7-IC2	*EI-359626	IC NJM78M15A
7-IC3	*EI-359628	IC NJM79M15A
7-R1	*ER-360725	R OMF H S12 FS 1W 221J
7-TR1	*ET-360687	TR 2SB1015 Y,GR
7-TR2	*ET-349883	TR 2SC3243 D,E F05
7-TR3	*ET-354083	TR 2SD1189 Q,R
7-TR4	ET-360067	TR 2SC3330 T,U F05
7-TR5	*ET-353899	TR 2SA1317 S,T,U
7-TR6	*ET-356817	TR 2SB891 Q,R
7-TR7	ET-360067	TR 2SC3330 T,U F05
7-TR8	ET-360067	TR 2SC3330 T,U F05
7-TR9	ET-360067	TR 2SC3330 T,U F05
7-F3	*EF-306952	FUSE TSC A 250V 4.00A [J]
7-F4	*EF-306124	FUSE TSC A 250V 630MA [J]
7-F5	*EF-306124	FUSE TSC A 250V 630MA [J]
7-F3A	*EF-306957	FUSE TSC 125V 4.00A [C,A]
7-F4A	*EF-305703	FUSE TSC 125V 630MA [C,A]
7-F5A	*EF-305703	FUSE TSC 125V 630MA [C,A]
7-F3B	*EF-691007	FUSE SEMKO T 250V 3.15A [E,V,S]
7-F4B	*EF-593706	FUSE SEMKO T 250V 500MA [E,V,S]
7-F5B	*EF-593706	FUSE SEMKO T 250V 500MA [E,V,S]
7-F3C	*EF-359225	FUSE BET T 250V 3.15A [B]
7-F4C	*EF-355374	FUSE BET T 250V 500MA [B]
7-F5C	*EF-355374	FUSE BET T 250V 500MA [B]

8. POWER SW P.C BOARD

Ref. No.	Part No.	Description
8-C1	*EC-361942	C CE V DNS103ZV V 103Z 400AC
8-SW1	*ES-344270	SW PUSH SDLD1P003 01-1

9. OPERATION P.C BOARD

Ref. No.	Part No.	Description
9-D1	ED-359534	D LED SLH-34VC3F-R RED
9-TS1	ES-365851	SW TACT SPPQ19
9-TS2	ES-365851	SW TACT SPPQ19
9-TS3	ES-365851	SW TACT SPPQ19
9-TS4	ES-365851	SW TACT SPPQ19
9-TS5	ES-365851	SW TACT SPPQ19
9-TS6	ES-365851	SW TACT SPPQ19
9-TS7	ES-365851	SW TACT SPPQ19
9-TS8	ES-365851	SW TACT SPPQ19
9-TS9	ES-365851	SW TACT SPPQ19
9-TS10	ES-365851	SW TACT SPPQ19
9-TS11	ES-365851	SW TACT SPPQ19
9-TS12	ES-365851	SW TACT SPPQ19
9-TS13	ES-365851	SW TACT SPPQ19
9-TS14	ES-365851	SW TACT SPPQ19
9-TS15	ES-365851	SW TACT SPPQ19
9-TS16	ES-365851	SW TACT SPPQ19
9-TS17	ES-365851	SW TACT SPPQ19
9-TS18	ES-365851	SW TACT SPPQ19
9-TS19	ES-365851	SW TACT SPPQ19

10. CONTRAST P.C BOARD

Ref. No.	Part No.	Description
10-VR5	EV-370917	VR VB12L7X5PH2JN15CK B202

11. INPUT JACK P.C BOARD

Ref. No.	Part No.	Description
11-J1	EJ-359642	PHONE J 3P HLJ4307-01-3060
11-J2	EJ-354269	PHONE J 3P HLJ0540-110 6.3

12. OUTPUT JACK P.C BOARD

Ref. No.	Part No.	Description
12-J3	EJ-354269	PHONE J 3P HLJ0540-110 6.3
12-J4	EJ-354269	PHONE J 3P HLJ0540-110 6.3
12-L1	EO-345909	COIL FIX 1 LAL03KH 4R7K
12-L2	EO-345909	COIL FIX 1 LAL03KH 4R7K
12-L3	EO-345909	COIL FIX 1 LAL03KH 4R7K

13. VOLUME P.C BOARD

Ref. No.	Part No.	Description
13-VR1	EV-361200	VR ROTARY 16P10 B502
13-VR2	EV-361200	VR ROTARY 16P10 B502
13-VR3	EV-359551	VR ROTARY 16P10 A502

14. ROTARY ENCORDER P.C BOARD

Ref. No.	Part No.	Description
14-VR4	EZ-370918	ROTARY ENCORDER EC16B W/C 24P

15. FILTER P.C BOARD

Ref. No.	Part No.	Description
15-C2	*EC-358450	C CE V DNS102MBE B 102M 400AC
15-C3	*EC-358450	C CE V DNS102MBE B 102M 400AC
15-FL1	*EO-360068	COIL LF LF-2 B
15-F1	*EF-306949	FUSE TSC A 250V 1.25A [J]
15-F1A	*EF-308847	FUSE TSC 125V 1.60A [C,A]
15-F1B	*EF-593706	FUSE SEMKO T 250V 500MA [E,V,S]
15-F1C	*EF-355374	FUSE BET T 250V 500MA [B]

16. ASSEMBLY BLOCK

Ref. No.	Part No.	Description
16-1	SA-349332	FOOT
16-2	ZS-344754	ST PAN30X06STL CMT C080 [FOOT FIX]
16-3	ZS-300519	ST PAN40X08STL CMT [POWER TRANS FIX]
16-4	SP-362397B-B	PANEL REAR S700(J)
16-4A	SP-362397C-A	PANEL REAR S700(C,A)
16-4B	SP-362397A-A	PANEL REAR S700(E,V,B,S)
16-5	ZS-319460	T2BR30X06STL BZN PROJECTION [REAR PANEL FIX]
16-6	ZS-350934	PT BR30X08STL BNI [VOLTAGE SELECTOR FIX]
16-7	ZS-362534	T2CTS30X10STL BNI [LNLET FIX]
16-8	*EW-365947	AC CORD 250 SKP210KS17B A J [J]
16-8A	*EW-357931	AC CORD 3 CORES VM0033A SJT18A [C]
16-8B	*EW-366055	AC CORD 250 KP11WSJT18 UC [A]
16-8C	*EW-359641	AC CORD 2C KP-419C/KS-17 EV [E,V]
16-8D	*EW-358631	AC CORD 2C KS-17 LTBS2F BS [B]
16-8E	*EW-358630	AC CORD 2C KP560 LTSA2F KS17 S [S]
16-9	*EZ-302906	STRAIN RELIEF SR-6N-4 [C,A]
16-10	ZS-343159	T2BR30X06STL NI3 [UPPER COVER FIX]
16-LCD1	EM-371166	IND LCD EDM-CC161373-C
16-T901	*BT-366080	TRANS POWER S700T-10 (J)
16-T901A	*BT-366081	TRANS POWER S700T-30 (C,A)
16-T901B	*BT-366082	TRANS POWER S700T-50 (E,V,B,S)
16-SW901	*ES-306430	SW SLIDE J-S4013#01 01-2 [E,V,B,S]
16-J901	*EJ-358633	SOCKET INLET SOT-17 2P [J,E,V,B,S]

ASSEMBLY BLOCK

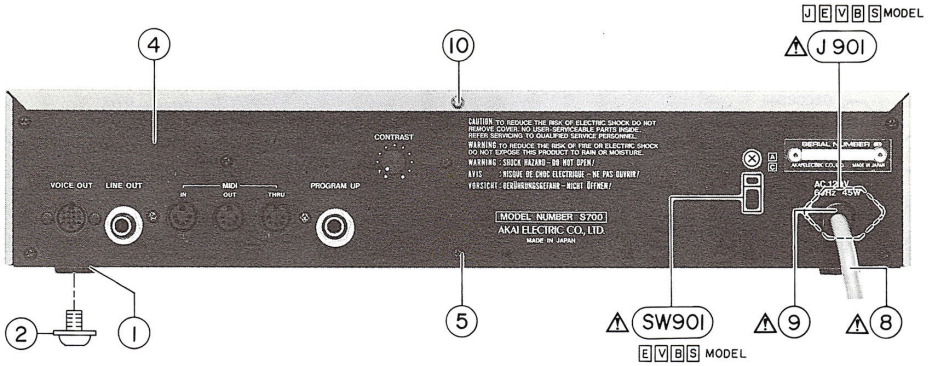

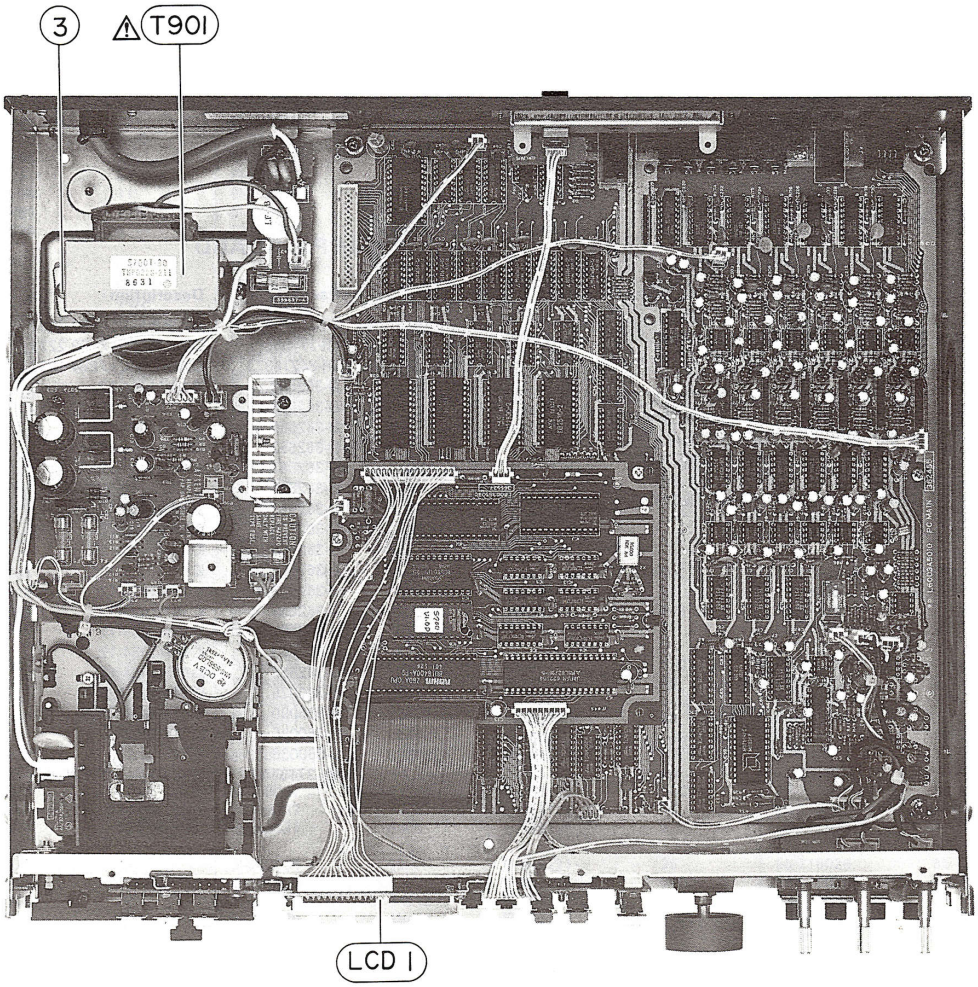

FLOPPY DISK DRIVE BLOCK

17. FINAL ASSEMBLY BLOCK

Ref. No.	Part No.	Description
17-1	BD-B362399	PANEL FRONT S700 PART
17-2	SK-343017J	KNOB POWER (C)
17-3	SK-362347A-A	KNOB PUSH (1)
17-4	SK-362347C-A	KNOB PUSH (3)
17-5	SK-362405	KNOB ROTARY (A)
17-6	SK-B364611	KNOB MONITOR RED (2) PART
17-7	SK-B364614	KNOB MONITOR WHITE (2) PART
17-8	SP-362394A	COVER UPPER (A)
17-9	ZS-341959	ST BID40X06STL NI3
17-10	SH-362401A	RACK HANDLE
17-11	ZS-321783	ST BID40X10STL NI3

ASK70
1. DRAM P.C BOARD

Ref. No.	Part No.	Description
1-IB1	EH-371596	COMP R RKC1/8B8 223J
1-IB2	EH-371598	COMP R RKC1/8B8 222J
1-IB3	EH-347743	COMP R RKC1/8B4 103J
1-IC1	EI-362553	IC MN41464-12
1-IC2	EI-362553	IC MN41464-12
1-IC3	EI-362553	IC MN41464-12
1-IC4	EI-362553	IC MN41464-12
1-IC5	EI-362553	IC MN41464-12
1-IC6	EI-362553	IC MN41464-12
1-IC7	EI-362553	IC MN41464-12
1-IC8	EI-362553	IC MN41464-12
1-IC9	EI-362553	IC MN41464-12
1-IC10	EI-362553	IC MN41464-12
1-IC11	EI-362553	IC MN41464-12
1-IC12	EI-362553	IC MN41464-12
1-IC13	EI-362553	IC MN41464-12
1-IC14	EI-362553	IC MN41464-12
1-IC15	EI-362553	IC MN41464-12
1-IC16	EI-360025	IC TC74HC138P
1-IC17	EI-365099	IC TC74HC14P
1-IC18	EI-360025	IC TC74HC138P
1-IC19	EI-360036	IC TC74HC32P
1-1	MH-371594	SPACER SUPPORT 3675

INDEX

Part No.	Ref. No.	Part No.	Ref. No.	Part No.	Ref. No.	Part No.	Ref. No.
AX-717097	2-18	EH-359185	5-IB3	EI-360043	5-IC62	EI-371695	50
BA-L6003A020A	3-3	EH-359185	5-IB4	EI-360045	30	EI-371695	6-IC4
BA-L6003A030A	3-1	EI-307789	46	EI-360045	5-IC66	EI-372008	73
BA-L6003A040A	3-2	EI-307789	4-IC1	EI-360045	5-IC69	EI-372008	5-IC21
BA-719015	2-3	EI-349719	41	EI-360045	5-IC70	EI-372008	5-IC22
BA-719015	3-4	EI-349719	5-IC63	EI-360045	5-IC71	EI-372103	36
BB-366056	2-1	EI-349719	5-IC72	EI-360046	37	EI-372103	5-IC30
BD-B362399	17-1	EI-354146	75	EI-360046	5-IC61	EI-372103	5-IC31
BD-719016	2-5	EI-354146	5-IC32	EI-360047	66	EI-390060	27
BS-719020	2-10	EI-354146	5-IC33	EI-360047	5-IC64	EI-390060	5-IC99
BT-366080	1	EI-354197	74	EI-360048	58	EI-390060	5-IC100
BT-366080	16-T901	EI-354197	4-IC2	EI-360048	5-IC58	EI-390060	5-IC101
BT-366081	2	EI-354283	26	EI-360049	25	EI-390060	5-IC102
BT-366081	16-T901A	EI-354283	5-IC85	EI-360049	5-IC59	EI-390060	5-IC103
BT-366082	3	EI-354283	5-IC86	EI-360050	28	EI-390060	5-IC104
BT-366082	16-T901B	EI-354283	5-IC87	EI-360050	5-IC65	EI-719023	31
EC-358450	15-C2	EI-354283	5-IC88	EI-360050	5-IC91	EI-719023	4-IC3
EC-358450	15-C3	EI-354283	5-IC89	EI-360053	60	EJ-354269	11-J2
EC-361942	8-C1	EI-354283	5-IC90	EI-360053	5-IC39	EJ-354269	12-J3
ED-200213	7	EI-359552	44	EI-360054	59	EJ-354269	12-J4
ED-200213	7-D1	EI-359552	7-IC1	EI-360054	5-IC29	EJ-358633	16-J901
ED-301911	9	EI-359626	47	EI-360054	5-IC34	EJ-358691	6-1
ED-301911	5-D2	EI-359626	7-IC2	EI-360054	5-IC40	EJ-359642	11-J1
ED-301911	5-D3	EI-359628	48	EI-360058	38	EJ-360771	5-J4
ED-301911	5-D4	EI-359628	7-IC3	EI-360058	5-IC79	EJ-364256	5-J2
ED-301911	5-D6	EI-360025	56	EI-360058	5-IC80	EJ-364322	5-J1
ED-301911	5-D7	EI-360025	5-IC23	EI-360058	5-IC81	EJ-364322	5-J3
ED-301911	5-D8	EI-360025	5-IC27	EI-360058	5-IC82	EJ-365932	6-P6
ED-301911	5-D9	EI-360025	5-IC51	EI-360058	5-IC83	EM-371166	78
ED-301911	6-D1	EI-360025	5-IC52	EI-360058	5-IC84	EM-371166	16-LCD1
ED-301911	7-D7	EI-360025	6-IC6	EI-360565	43	EO-345909	12-L1
ED-330319	6	EI-360026	54	EI-360565	5-IC92	EO-345909	12-L2
ED-330319	7-D4	EI-360026	5-IC4	EI-360565	5-IC93	EO-345909	12-L3
ED-331626	12	EI-360026	5-IC9	EI-360565	5-IC94	EO-360068	79
ED-331626	7-D5	EI-360026	5-IC17	EI-360565	5-IC95	EO-360068	15-FL1
ED-337267	13	EI-360026	5-IC28	EI-360565	5-IC96	EQ-348929	80
ED-337267	6-D2	EI-360027	71	EI-360565	5-IC97	EQ-348929	5-RL1
ED-343996	11	EI-360027	5-IC25	EI-360954	32	ER-326169	81
ED-343996	7-D6	EI-360027	5-IC26	EI-360954	5-IC67	ER-326169	5-FR1
ED-359534	5	EI-360028	70	EI-362553	39	ER-331188	82
ED-359534	9-D1	EI-360028	5-IC12	EI-362553	5-IC41	ER-331188	5-FR2
ED-361055	8	EI-360028	5-IC19	EI-362553	5-IC42	ER-360725	7-R1
ED-361055	7-D2	EI-360028	5-IC20	EI-362553	5-IC43	ER-363911	6-R13
ED-361055	7-D10	EI-360029	61	EI-362553	5-IC44	ES-306430	86
ED-361055	7-D11	EI-360029	5-IC13	EI-362553	5-IC45	ES-306430	16-SW901
ED-706268	14	EI-360030	65	EI-362553	5-IC46	ES-344270	83
ED-706268	4-D3	EI-360030	5-IC3	EI-362553	5-IC47	ES-344270	8-SW1
ED-713919	10	EI-360030	5-IC98	EI-362553	5-IC48	ES-365851	87
ED-713919	4-D1	EI-360031	67	EI-362553	5-IC49	ES-365851	9-TS1
ED-713919	4-D2	EI-360031	5-IC1	EI-362554	72	ES-365851	9-TS2
ED-719017	4	EI-360031	5-IC6	EI-362554	6-IC8	ES-365851	9-TS3
ED-719017	2-6	EI-360031	6-IC9	EI-362588	45	ES-365851	9-TS4
EF-305703	20	EI-360032	62	EI-362588	5-IC68	ES-365851	9-TS5
EF-305703	7-F4A	EI-360032	5-IC7	EI-362588	5-IC73	ES-365851	9-TS6
EF-305703	7-F5A	EI-360035	57	EI-362588	5-IC74	ES-365851	9-TS7
EF-306124	17	EI-360035	5-IC37	EI-362588	5-IC75	ES-365851	9-TS8
EF-306124	7-F4	EI-360035	5-IC38	EI-362588	5-IC76	ES-365851	9-TS9
EF-306124	7-F5	EI-360036	64	EI-362588	5-IC77	ES-365851	9-TS10
EF-306949	15	EI-360036	5-IC8	EI-362588	5-IC78	ES-365851	9-TS11
EF-306949	15-F1	EI-360036	5-IC11	EI-364253	49	ES-365851	9-TS12
EF-306952	16	EI-360036	5-IC16	EI-364253	6-IC10	ES-365851	9-TS13
EF-306952	7-F3	EI-360036	5-IC24	EI-365528	76	ES-365851	9-TS14
EF-306957	19	EI-360036	6-IC7	EI-365528	6-X2	ES-365851	9-TS15
EF-306957	7-F3A	EI-360037	52	EI-365830	69	ES-365851	9-TS16
EF-308847	18	EI-360037	5-IC10	EI-365830	5-IC35	ES-365851	9-TS17
EF-308847	15-F1A	EI-360037	5-IC15	EI-365830	5-IC36	ES-365851	9-TS18
EF-355374	24	EI-360037	5-IC18	EI-366112	40	ES-365851	9-TS19
EF-355374	7-F4C	EI-360037	5-IC56	EI-366112	6-IC2	ES-719025	84
EF-355374	7-F5C	EI-360037	5-IC57	EI-366119	33	ES-719025	4-SW1
EF-355374	15-F1C	EI-360037	6-IC5	EI-366119	6-IC1	ES-719025	4-SW3
EF-359225	23	EI-360038	53	EI-366121	35	ES-719026	85
EF-359225	7-F3C	EI-360038	5-IC2	EI-366121	6-IC3	ES-719026	4-SW2
EF-593706	22	EI-360038	6-IC13	EI-366122	29	ET-308867	91
EF-593706	7-F4B	EI-360039	55	EI-366122	6-IC11	ET-308867	4-TR1
EF-593706	7-F5B	EI-360039	5-IC14	EI-366126	34	ET-316523	96
EF-593706	15-F1B	EI-360040	51	EI-366126	5-IC50	ET-316523	5-TR11
EF-691007	21	EI-360040	6-IC12	EI-366130	77	ET-316523	5-TR12
EF-691007	7-F3B	EI-360042	63	EI-366130	6-X1	ET-338447	93
EH-359185	5-IB1	EI-360042	5-IC53	EI-371144	68	ET-338447	5-TR10
EH-359185	5-IB2	EI-360043	42	EI-371144	5-IC5	ET-338447	5-TR13

Part No.	Ref. No.	Part No.	Ref. No.	Part No.	Ref. No.	Part No.	Ref. No.
ET-349883	97	EV-357619	5-VR6	ZS-344754	16-2		
ET-349883	6-TR1	EV-359551	101	ZS-350934	16-6		
ET-349883	7-TR2	EV-359551	13-VR3	ZS-362534	16-7		
ET-353899	92	EV-361200	102	EH-347743	1-IB3		
ET-353899	5-TR4	EV-361200	13-VR1	EH-371596	1-IB1		
ET-353899	5-TR5	EV-361200	13-VR2	EH-371598	1-IB2		
ET-353899	5-TR6	EV-370917	103	EI-360025	1-IC16		
ET-353899	5-TR7	EV-370917	10-VR5	EI-360025	1-IC18		
ET-353899	5-TR8	EW-357931	16-8A	EI-360036	1-IC19		
ET-353899	5-TR9	EW-358630	16-8E	EI-362553	1-IC1		
ET-353899	7-TR5	EW-358631	16-8D	EI-362553	1-IC2		
ET-354083	99	EW-359641	16-8C	EI-362553	1-IC3		
ET-354083	7-TR3	EW-365947	16-8	EI-362553	1-IC4		
ET-354167	88	EW-366055	16-8B	EI-362553	1-IC5		
ET-354167	5-PH1	EW-367384	5-P1	EI-362553	1-IC6		
ET-356817	95	EZ-302906	16-9	EI-362553	1-IC7		
ET-356817	7-TR6	EZ-370918	104	EI-362553	1-IC8		
ET-360067	98	EZ-370918	14-VR4	EI-362553	1-IC9		
ET-360067	5-TR1	MZ-719014	2-2	EI-362553	1-IC10		
ET-360067	5-TR2	MZ-719424	2-19	EI-362553	1-IC11		
ET-360067	5-TR3	SA-349332	16-1	EI-362553	1-IC12		
ET-360067	7-TR4	SB-719018	2-8	EI-362553	1-IC13		
ET-360067	7-TR7	SH-362401A	17-10	EI-362553	1-IC14		
ET-360067	7-TR8	SK-B364611	17-6	EI-362553	1-IC15		
ET-360067	7-TR9	SK-B364614	17-7	EI-365099	1-IC17		
ET-360646	89	SK-343017J	17-2	MH-371594	1-1		
ET-360646	5-TR14	SK-362347A-A	17-3				
ET-360687	94	SK-362347C-A	17-4				
ET-360687	7-TR1	SK-362405	17-5				
ET-364060	90	SP-362394A	17-8				
ET-364060	4-TR2	SP-362397A-A	16-4B				
ET-364060	4-TR3	SP-362397B-B	16-4				
ET-364060	4-TR6	SP-362397C-A	16-4A				
ET-719024	100	ZG-719019	2-9				
ET-719024	4-TR4	ZG-719022	2-11				
EV-357619	5-VR1	ZS-300519	16-3				
EV-357619	5-VR2	ZS-319460	16-5				
EV-357619	5-VR3	ZS-321783	17-11				
EV-357619	5-VR4	ZS-341959	17-9				
EV-357619	5-VR5	ZS-343159	16-10				

S700

ABBREVIATION FOR SERVICE MANUAL

ABBREVIATION	EXPLANATION	ABBREVIATION	EXPLANATION
ALTER	ALTERnating	MON	MONitor
BUSDIR	BUS DIRection	RFSH	ReFreSH
CASSR	CASSette Read	RXD	Receive Data
CASSW	CASSette Write	RD	ReaD
CH	CHannel	SHOT	one SHOT
CS	Chip Select	SIN	Signal INput
DUB	over DUB	SLTSL	SLoT SeLect
IORQ	I/O ReQuest	TRANS	TRANSpose
LOOP	LOOPing	TRIG	TRIGger
M1	Machin cycle 1	TXD	Transmit Data
MREQ	Memoly REQuest	V.REF	Voltage for REFerence
MIDI	Musical Instrument Digital Interface	WR	WRite

AKAI ELECTRIC CO., LTD.

12-14, 2-Chome, Higashi-Kojiya, Ohta-Ku, Tokyo, Japan

TEL: Tokyo (742) 5111 CABLE: HIFIAKAI TOKYO TELEX: J26261

Printed No. 870303-G1-600 Printed Date: April 13, 1987

950 Printed in Japan

AKAI

MODEL S700

SCHEMATIC DIAGRAM AND PC BOARDS

TABLE OF CONTENTS

1. ICs 2
2. BLOCK DIAGRAM 5
3. CONNECTION DIAGRAM 6
4. OPERATION PCB, CONTRAST VR PCB, POWER SUPPLY PCB, INPUT JACK PCB, OUTPUT PCB, VOLUME PCB, POWER SW PCB, FILTER PCB, ROTARY ENCODER PCB 7
5. CPU PCB 8
6. CPU SCHEMATIC DIAGRAM 9
7. MAIN SCHEMATIC DIAGRAM (2/1) 10
8. MAIN PCB 11
9. MAIN SCHEMATIC DIAGRAM (2/2) 12
10. MAIN PCB 13
11. ASK 70 D RAM SCHEMATIC DIAGRAM 14
12. D RAM PCB 15

74HC138P (3 to 8 Demultiplexer)

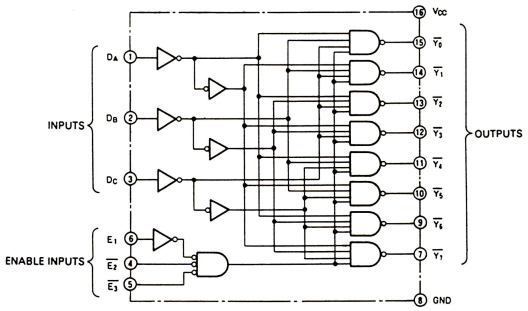

INPUTS					OUTPUTS							
ENABLE		SELECT										
G1	G2*	C	B	A	Y0	Y1	Y2	Y3	Y4	Y5	Y6	Y7
X	H	X	X	X	H	H	H	H	H	H	H	H
L	X	X	X	X	H	H	H	H	H	H	H	H
H	L	L	L	L	L	H	H	H	H	H	H	H
H	L	L	L	H	H	L	H	H	H	H	H	H
H	L	L	H	L	H	H	L	H	H	H	H	H
H	L	L	H	H	H	H	H	L	H	H	H	H
H	L	H	L	L	H	H	H	H	L	H	H	H
H	L	H	L	H	H	H	H	H	H	L	H	H
H	L	H	H	L	H	H	H	H	H	H	L	H
H	L	H	H	H	H	H	H	H	H	H	H	L

74HC157P (2 to 1 Data Selector)

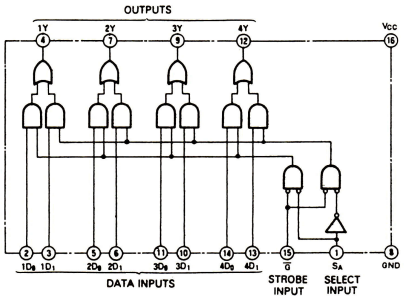

INPUTS		OUTPUT Y
Select	Strobe G	
X	H	L
L	L	A
H	L	B

74HC158P (Quad 2 to 1 Data Selectors)

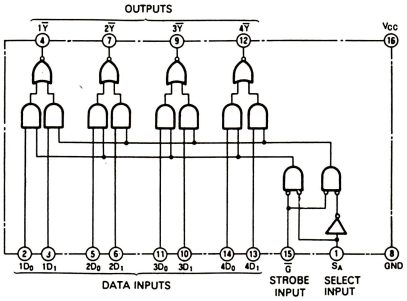

74HC173P (4 bit Resister 3 state)

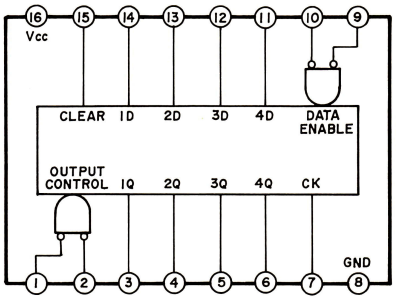

TRUTH TABLE

INPUT						OUTPUT $Q_A \sim Q_D$	OPERATION
CLEAR	CK	ENABLE		OUTPUT CONTROL			
		G1	G2	M	N		
L		L	L	—		1D ~ 4D	DATA SET
L	↑	H	X	—		—	HOLD
		X	H				
H	X	X	X	—		LLLL	CLEAR
—				H	X	Z	—
				X	H		

74HC244P (Octal 3 state Bus Buffers)

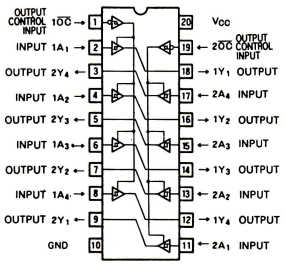

74HC245P (Octal 3 state Bus Transceiver)

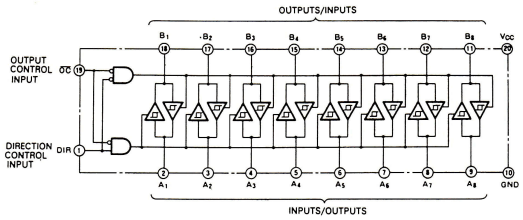

74HC374P (4 X 4 Binary Multiplier)

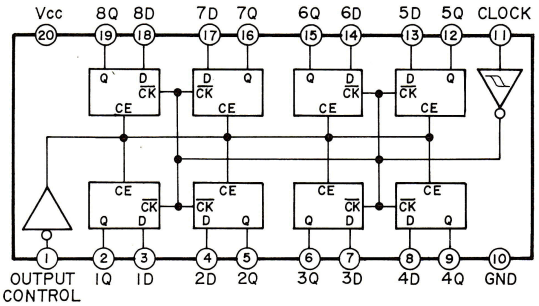

74HC259P (8 bit Addressable Latch)

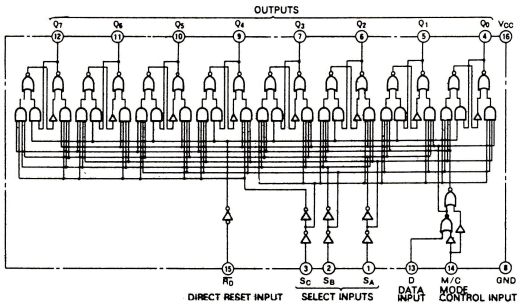

INPUTS		OUTPUT OF ADDRESSED LATCH	EACH OTHER OUTPUT	FUNCTION
CLEAR	$\overline{G}$			
H	L	D	Qi_0	Addressable Latch
H	H	Qi_0	Qi_0	Memory
L	L	D	L	8-Line Demultiplexer
L	H	L	L	Clear

74HC373P (Octal D-FFS)

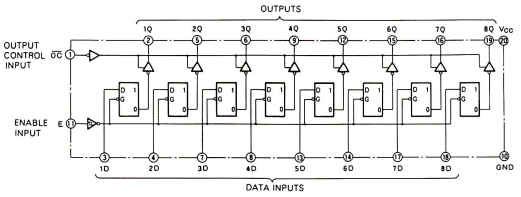

TRUTH TABLE

INPUT		OUTPUT
OUTPUT CONTROL	CK	
X	↑	DATA SET
H	X	OUTPUT HIGH IMPEDANCE

74HC540P (Octal 3 state Buffer (Inverted))

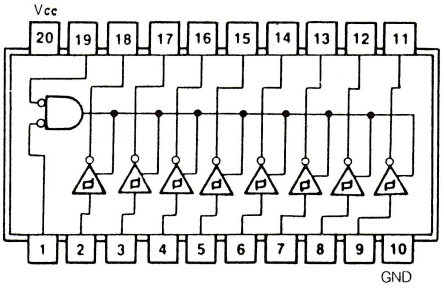

INPUT		OUTPUT
E_1	E_2	
L	L	$\overline{D}$
H	X	High Z
X	H	

MF 6 CN – 50 (6th order switched capacitor Buffer worth Low pass filter)

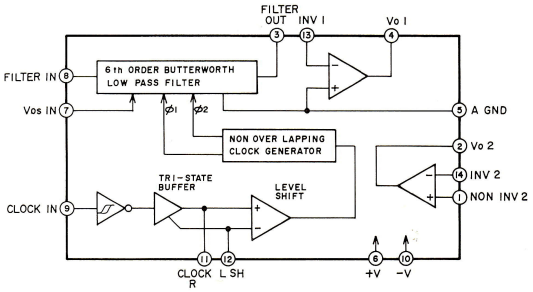

Information of ICs

NAME OF IC	FUNCTION
74HC00P	Quad 2 Input NAND
74HC04P	Hex Inverters
74HCU04	Hex Inverters
74HC32P	Quad 2 Input OR
74HC74P	Dual D-FFs with preset and clear
74HC86P	Quad 2 Input EX-OR
74HC138P	3 to 8 Demultiplexer
74HC157P	2 to 1 Data Selector
74HC173P	4 Bit Register 3-State
74HC174P	Hex D-FFs
74HC175P	Quad D-FFs
74HC245P	Octal 3-State Bus Tranceivers
74HC259P	8-Bit Addressable Latch
74HC373P	Octal D-FFs
74HC374P	4 × 4 Binary Maltiplier
74HC540P	Octal 3-State Buffer (Inverted)
74HC670P	4-4 Register Files (3-State)
74HC4040P	12 Stages Binary Counter
AM2504P	8-Bit/12-Bit Successive Apporoximation Registers
BA6110	Voltage Controlled Low Noise OP-Amplifier
BA9201-NS	8-Bit D/A Convertor with Latch
BA9221	12-Bit D/A Convertor
BU18400A-PS	8-Bit Micro Computer
DG211CJ	Quad Analog Switch
IR9311	Comparator

NAME OF IC	FUNCTION
LC3664N-12	8 × 8-Bit RAM
M5216P	
M5218P	Dual Low Noise OP-Amplifier
M5220P	Dual Low Noise Voltage Amplifier
M5223P	Dual J-FET Input OP-Amplifier
M5236P	Variable Output Voltage Regulator
M5238P	Dual FET Input OP-Amplifier
MB8863NM-G	Asynchronus Communications Interface Adaptor
MB87013	Quick Disk Interface
MB89251AP-G	Universal Synchronus Receiver/ Transmitter
MB89254	Programmable Timer Control
MF6CN-50	6th Order Switched Capacitor Buffer Worth Low Pass Filter
MF10CCN	Universal Switched Capacitor Filter
MN41464-12	4× 64 K-Bit N-Mos Dynamic RAM
NJM78M15	+15V Regulator
NJM79M15	−15V Regulator
PST520D-2	Reset
IMP82C37AP-5	Multi Mode DMA Controller
μPD78C11G-044-36	8-Bit Micro Computer with A/D Converter
μPD8253C-2	Programmable Interval Timer
μPD8279C-2	Programmable Key Board/Display Controller
TMM27128AP-20	8 × 16k-Bit EPROM

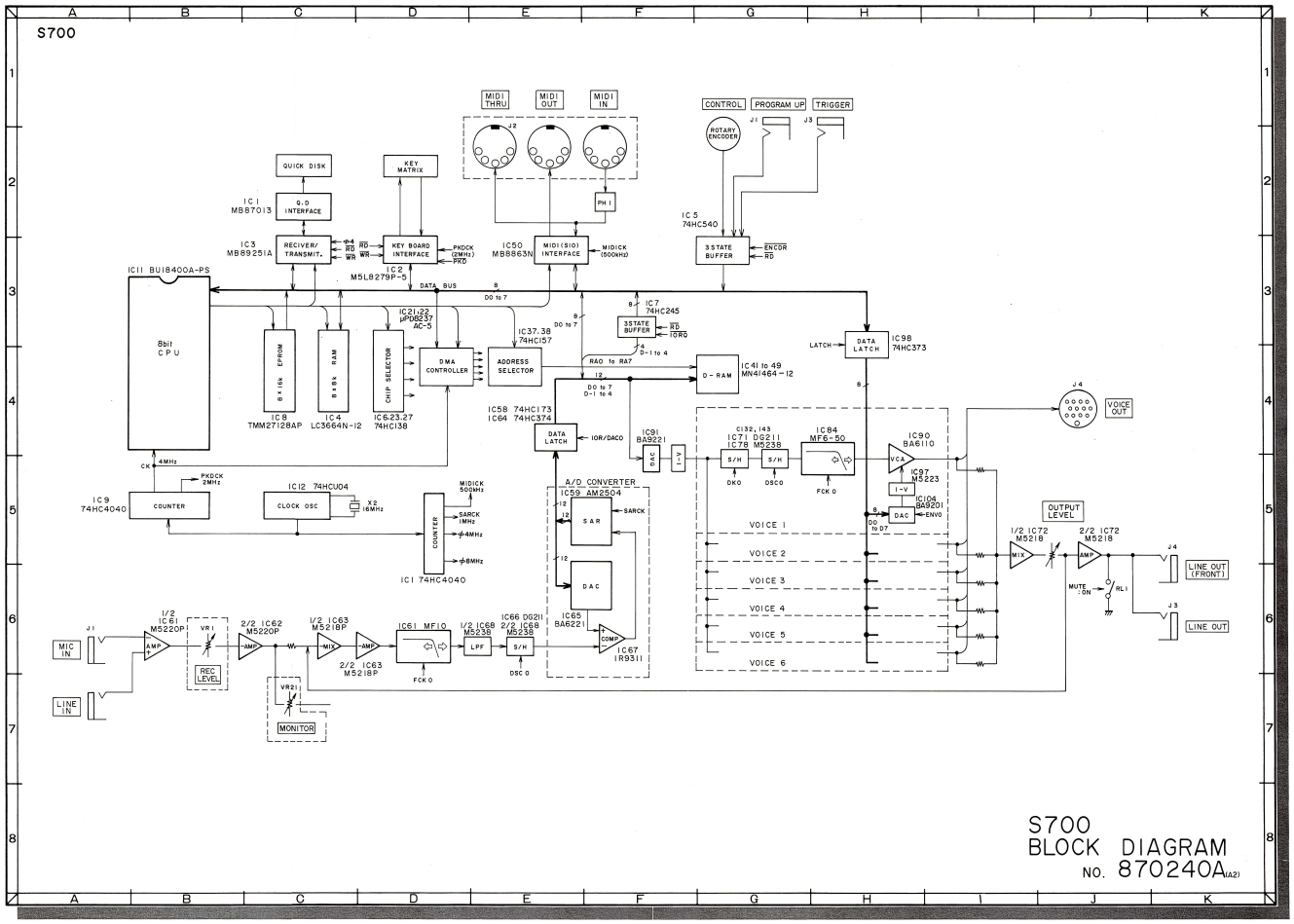

S700
BLOCK DIAGRAM
NO. 870240A(A2)

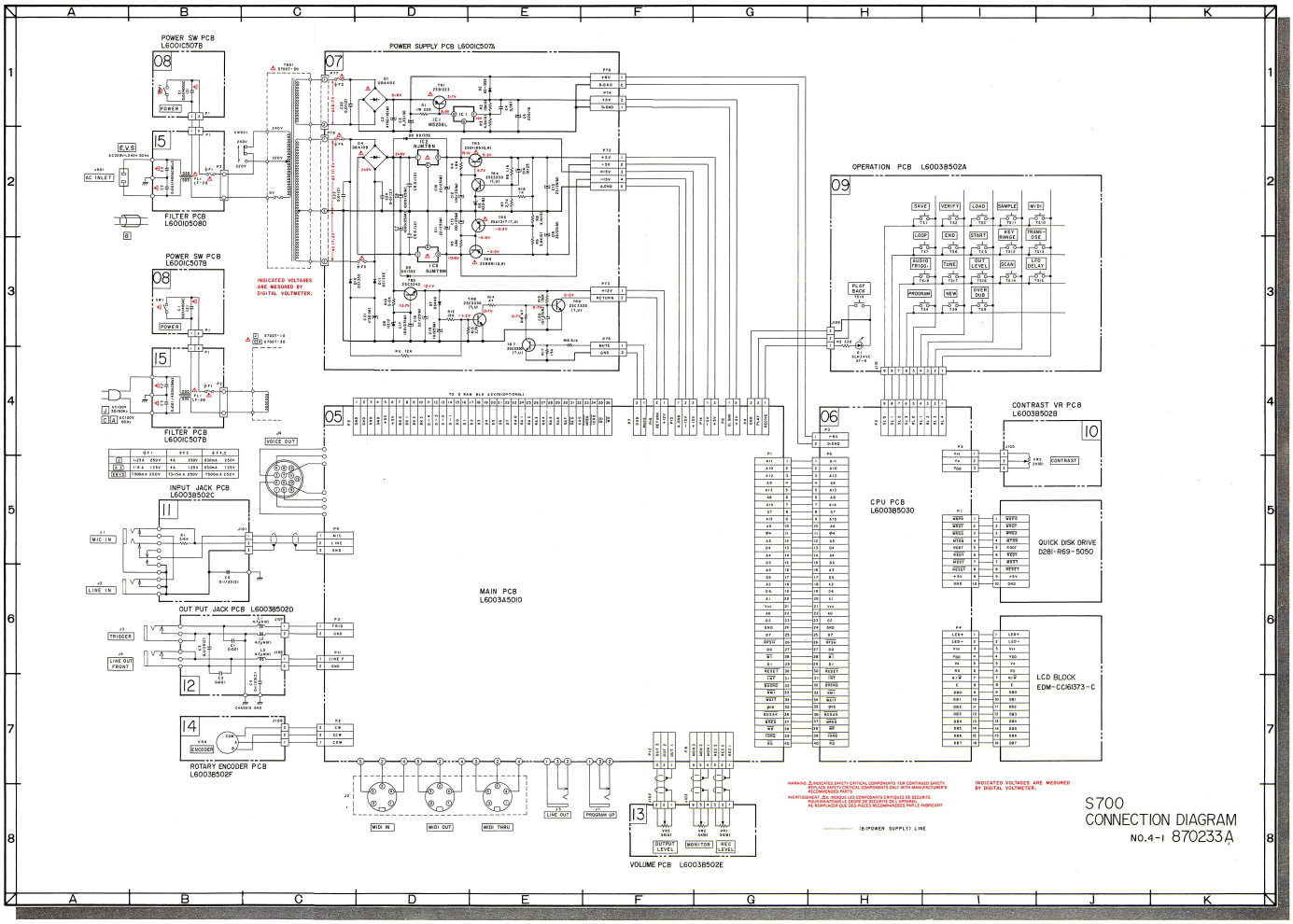
POWER SW PCB L6001C507B
POWER SUPPLY PCB L6001C507A
OPERATION PCB L6003B502A
FILTER PCB L6001D5080
POWER SW PCB L6001C507B
FILTER PCB L6001C507B
INDICATED VOLTAGES ARE MESURED BY DIGITAL VOLTMETER.
CONTRAST VR PCB L6003B502B
INPUT JACK PCB L6003B502C
OUT PUT JACK PCB L6003B5020
MAIN PCB L6003A5010
CPU PCB L6003B5030
QUICK DISK DRIVE D28I-R69-5050
LCD BLOCK EDM-CC16573-C
ROTARY ENCODER PCB L6003B502F
VOLUME PCB L6003B502E
MIDI IN
MIDI OUT
MIDI THRU
LINE OUT
PROGRAM UP
S700 CONNECTION DIAGRAM
NO.4-1 870233A

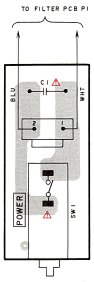

POWER SW PCB
L6001C507B

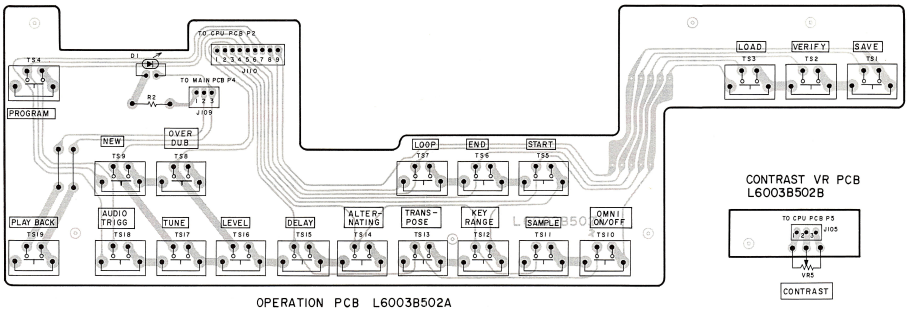

OPERATION PCB L6003B502A

CONTRAST VR PCB
L6003B502B

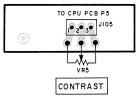

※	J	C.A	E.V.S.B
F1	1.25A250V	1.6A 125A	T500mA 250V

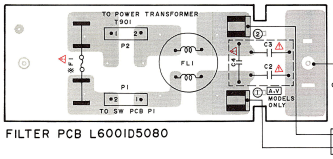

FILTER PCB L6001D5080

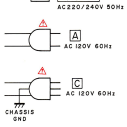

WARNING: ⚠ INDICATES SAFETY CRITICAL COMPONENTS. FOR CONTINUED SAFETY, REPLACE SAFETY CRITICAL COMPONENTS ONLY WITH MANUFACTURER'S RECOMMENDED PARTS

AVERTISSEMENT: ⚠ IL INDIQUE LES COMPOSANTS CRITIQUES DE SÉCURITÉ. POUR MAINTENIR LE DEGRÉ DE SÉCURITÉ DE L'APPAREIL, NE REMPLACER QUE DES PIÈCES RECOMMANDÉES PAR LE FABRICANT

INPUT JACK PCB
L6003B502C

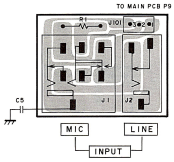

OUT PUT JACK PCB L6003B502D

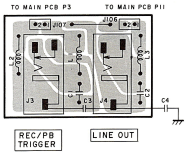

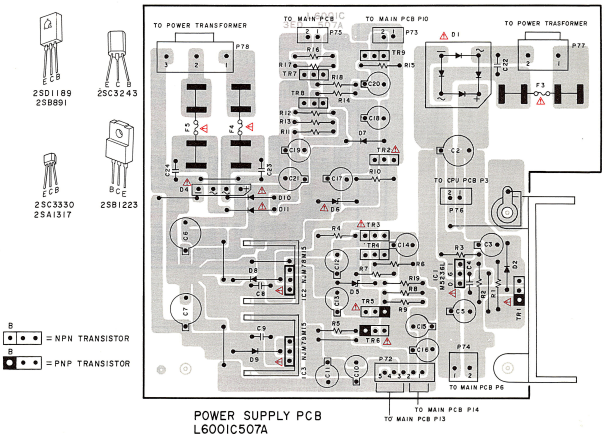

POWER SUPPLY PCB
L6001C507A

ROTARY ENCODER PCB
L6003B502F

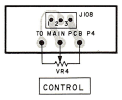

VOLUME PCB L6003B502E

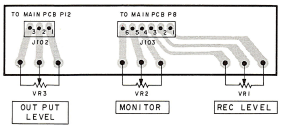

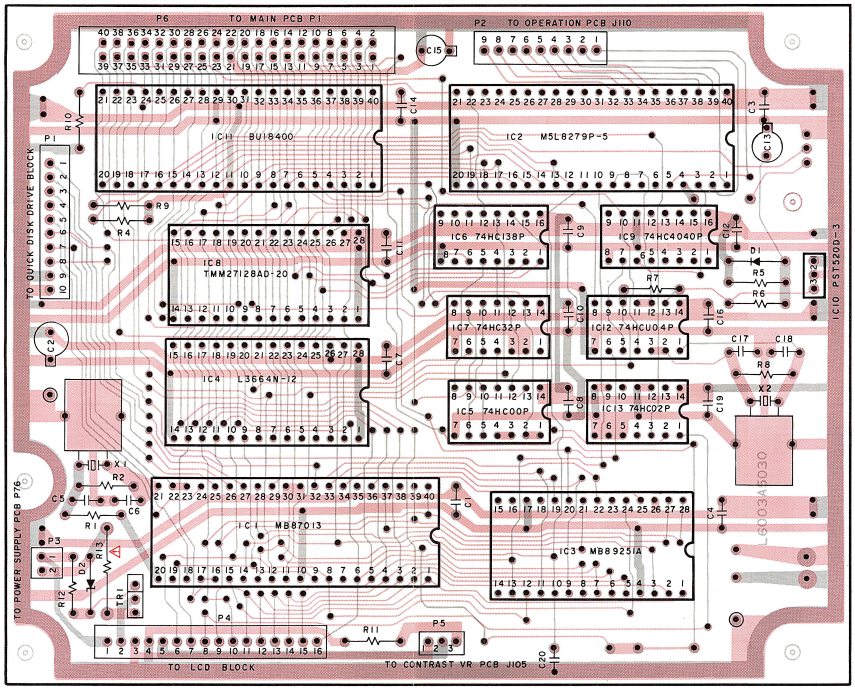

CPU PCB L6003A5030

WARNING: ⚠ INDICATES SAFETY CRITICAL COMPONENTS FOR CONTINUED SAFETY, REPLACE SAFETY CRITICAL COMPONENTS ONLY WITH MANUFACTURER'S RECOMMENDED PARTS

AVERTISSEMENT: ⚠ IL INDIQUE LES COMPOSANTS CRITIQUES DE SÉCURITÉ. POUR MAINTENIR LE DEGRÉ DE SÉCURITÉ DE L'APPAREIL, NE REMPLACER QUE DES PIÈCES RECOMMANDEES PAR LE FABRICANT

= NPN TRANSISTOR

2SC3243

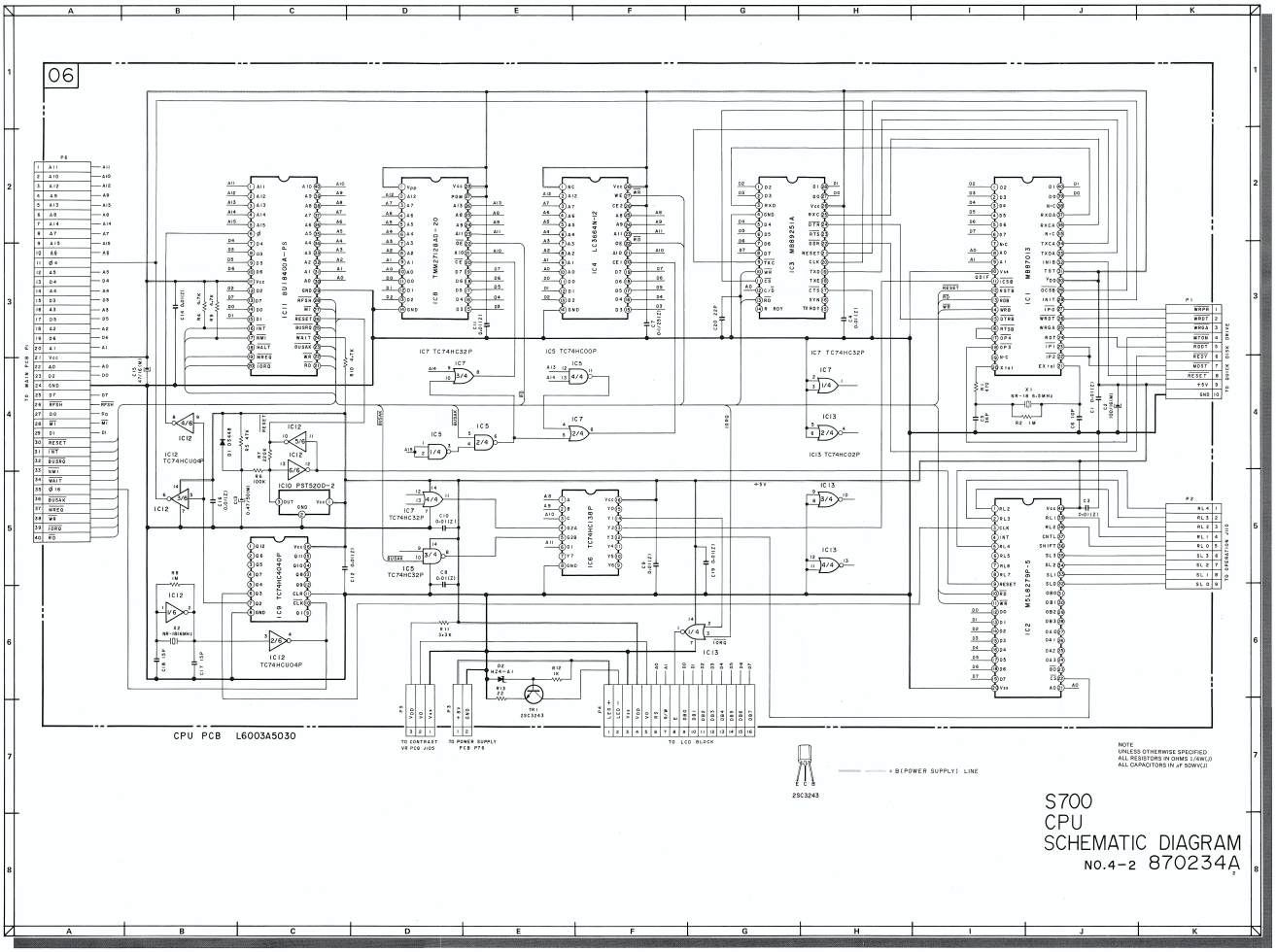
06
CPU PCB L6003A5030
TO CONTRAST VR PCB J105
TO POWER SUPPLY PCB P76
TO LCD BLOCK
TO MAIN PCB P1
TO QUICK DISK DRIVE
TO OPERATION J110
2SC3243
= B(POWER SUPPLY) LINE
NOTE
UNLESS OTHERWISE SPECIFIED
ALL RESISTORS IN OHMS 1/4W(J)
ALL CAPACITORS IN μF 50WV(J)
S700
CPU
SCHEMATIC DIAGRAM
NO.4-2 870234A

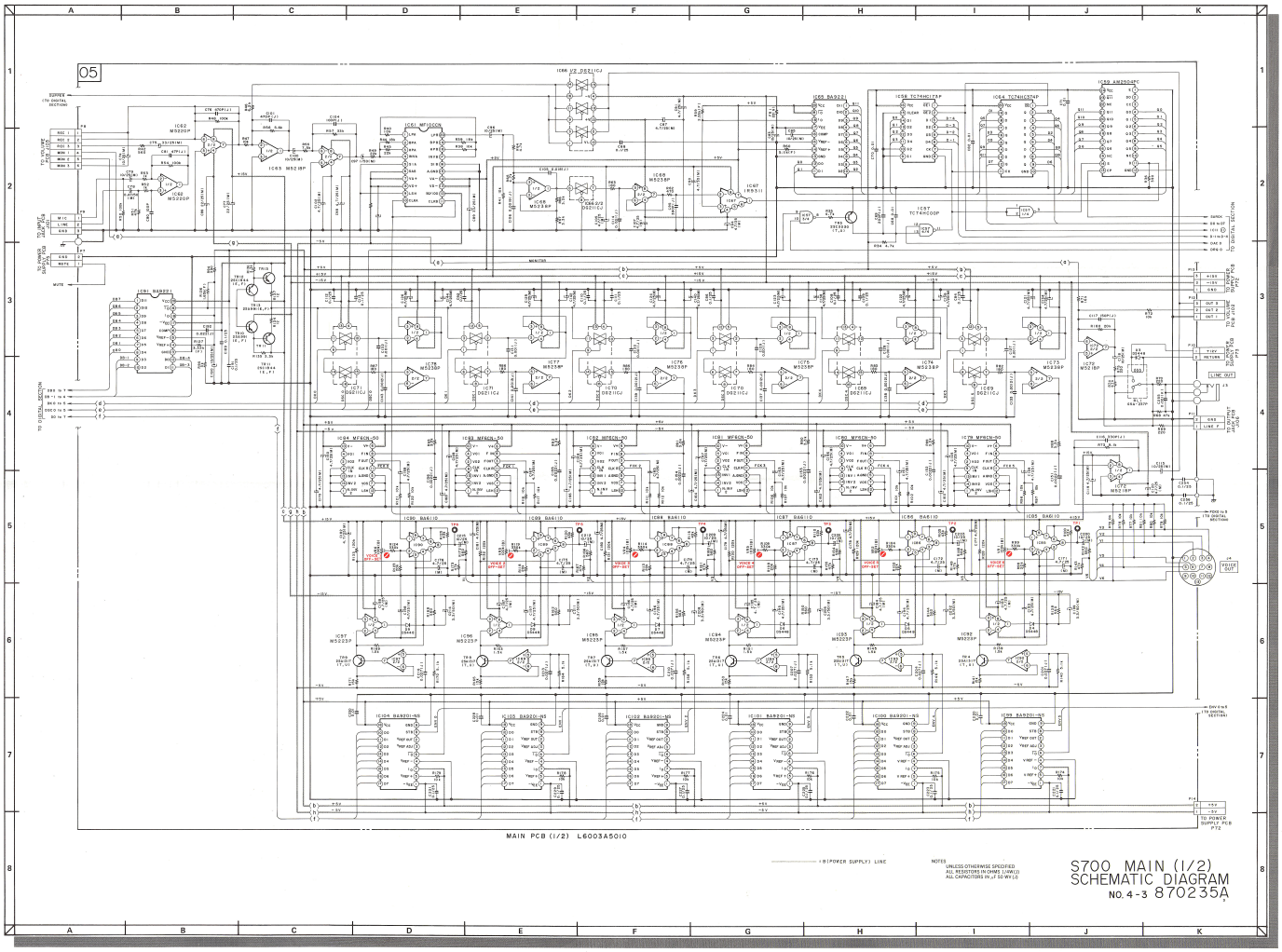
05
MAIN PCB (1/2) L6003A5010
S700 MAIN (1/2)
SCHEMATIC DIAGRAM
NO.4-3 870235A
NOTES
UNLESS OTHERWISE SPECIFIED
ALL RESISTORS IN OHMS 1/4W(J)
ALL CAPACITORS IN μF 50 WV(J)

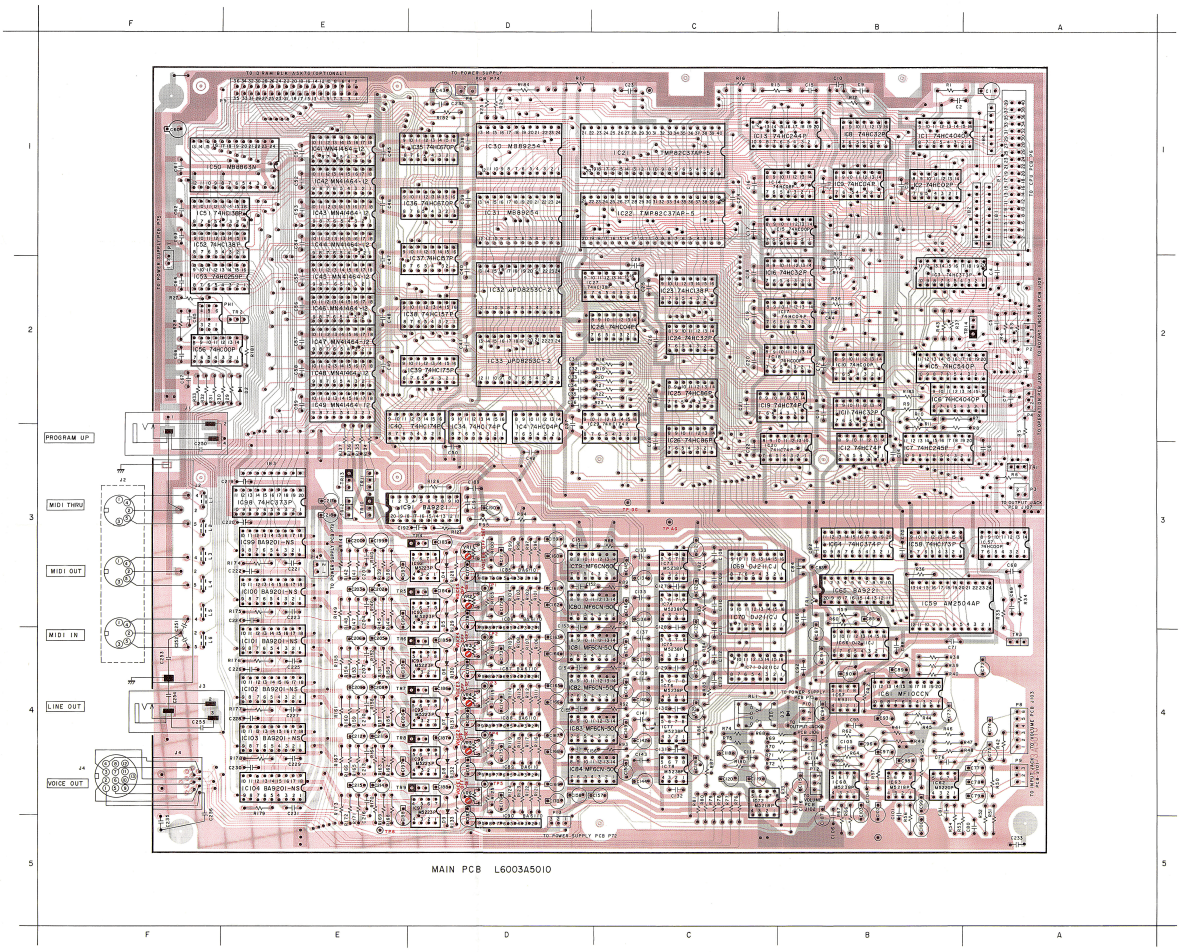

MAIN PCB L6003A5010

LOCATION OF COMPONENTS

[IC]

IC1 ---- A. B1
IC2 ------- B1
IC3 --- A. B2
IC4 ---- D2. 3
IC5 --- A. B2
IC6 ---- A. B2
IC7 --- B2. 3
IC8 ------- B1
IC9 ------- B1
IC10 ------ B2
IC11 ------ B2
IC12 --- B2. 3
IC13 --- B. C1
IC14 --- B. C1
IC15 --- B. C1
IC16 --- B. C2
IC17 --- B. C2
IC18 --- B. C2
IC19 --- B. C2
IC20 --- B. C3
IC21 --- C. D1
IC22 --- C. D1
IC23 ------ C. 2
IC24 ------ C. 2
IC25 ------ C. 2
IC26 ---- C2. 3
IC27 --- C. D2
IC28 ------ C. 2
IC29 ------ C2
IC30 ------ D1
IC31 ------ D1
IC32 ------ D2
IC33 ------ D2
IC34 --- D2. 3
IC35 --- D. E1
IC36 --- D. E1
IC37 --- D1. 2
IC38 --- D. E2
IC39 --- D. E2
IC40 --- D. E2
IC41 ------ E1
IC42 ------ E1
IC43 ------ E1
IC44 --- E1. 2
IC45 ------ E2
IC46 ------ E2
IC47 ------ E2
IC48 ------ E2
IC49 ------ E2
IC50 --- E. F1
IC51 --- E. F1
IC52 --- F1. 2
IC53 --- E. F2
IC56 --- E. F2
IC57 ------ A3
IC58 ------ B3
IC59 --- A3. 4
IC61 ------ B4
IC62 ------ B4
IC63 ------ B4
IC64 ------ B3
IC65 ------ B3
IC66 ------ B4
IC67 ------ B4
IC68 ------ B4
IC69 --- B. C3
IC70 --- B. C3
IC71 --- B. C4
IC72 --- C4. 5
IC73 ------ C3
IC74 ------ C3
IC75 ------ C4
IC76 ------ C4
IC77 ------ C4
IC78 ------ C4
IC79 --- C. D3
IC80 --- C. D3
IC81 --- C. D4
IC82 --- C. D4
IC83 --- C. D4
IC84 --- C. D4
IC85 ------ D3
IC86 --- D3. 4
IC87 ------ D4
IC88 ------ D4
IC89 ------ D4
IC90 ------ D5
IC91 --- D. E3
IC92 ------ D3
IC93 --- D3. 4
IC94 ------ D4
IC95 ------ D4
IC96 ------ D4
IC97 --- D4. 5
IC98 ------ E3
IC99 ------ E3
IC100 ----- E3
IC101 ----- E4
IC102 ----- E4
IC103 ----- E4
IC104 ----- E4
PH1 ------- F2

[TRANSISTOR]

TR1 ------- A3
TR2 ------- E2
TR3 ------- A4
TR4 ------- D3
TR5 ------- D3
TR6 ------- D4
TR7 ------- D4
TR8 ------- D4
TR9 ------- D4
TR10 ------ E3
TR11 ------ E3
TR12 ------ E3
TR13 ------ E3
TR14 ------ A3

[CONNECTOR]

P1 -------- A1
P2 -------- A2
P3 -------- A3
P4 -------- A2
P5 -------- E1
P6 -------- D1
P7 -------- F2
P8 -------- A4
P9 -------- A4
P10 ------- B4
P11 ------- B4
P12 ------- B4
P13 ------- D4. 5
P14 ------- E3
J1 ------- F2. 3
J2 ------- F3. 4
J3 ------- F4
J4 ------- F4

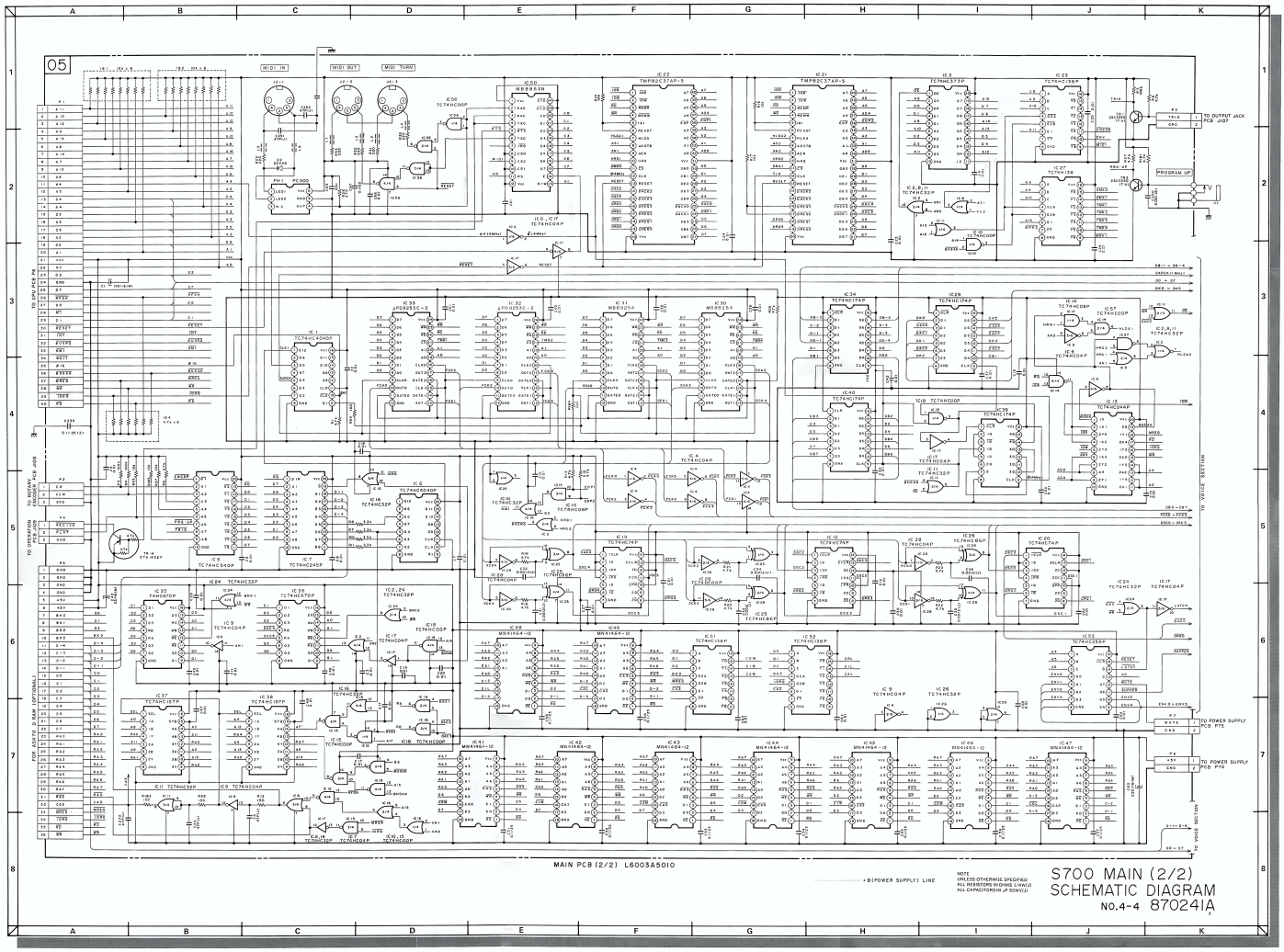

S700 MAIN (2/2)
SCHEMATIC DIAGRAM
NO.4-4 87024IA

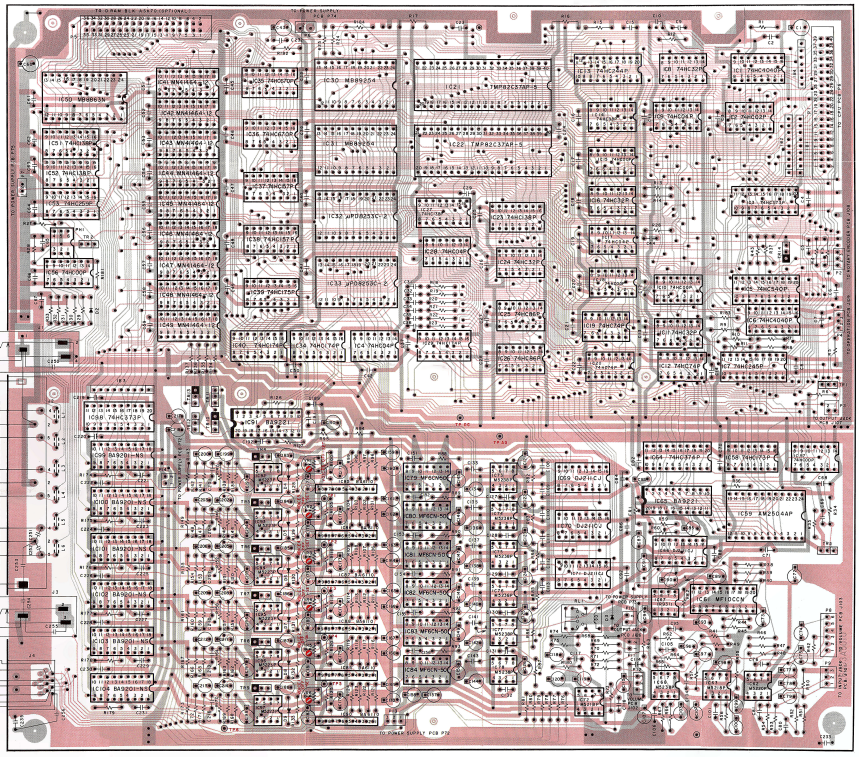

MAIN PCB L6003A5010

B = NPN TRANSISTOR

B = PNP TRANSISTOR

LOCATION OF COMPONENTS

[IC]

IC1 ---- A. B1
IC2 ------ B1
IC3 ---- A. B2
IC4 ---- B2. 3
IC5 ---- A. B2
IC6 ---- A. B2
IC7 ---- B2. 3
IC8 ------ B1
IC9 ------ B1
IC10 ------ B2
IC11 ------ B2
IC12 --- B2. 3
IC13 --- B. C1
IC14 --- B. C1
IC15 --- B. C1
IC16 --- B. C2
IC17 --- B. C2
IC18 --- B. C2
IC19 --- B. C2
IC20 --- B. C3
IC21 --- C. D1
IC22 --- C. D1
IC23 ---- C. 2
IC24 ---- C. 2
IC25 ---- C. 2
IC26 ---- C2. 3
IC27 --- C. D2
IC28 ---- C. 2
IC29 ------ C2
IC30 ------ D1
IC31 ------ D1
IC32 ------ D2
IC33 ------ D2
IC34 --- D2. 3
IC35 --- D. E1
IC36 --- D. E1
IC37 --- D1. 2
IC38 --- D. E2
IC39 --- D. E2
IC40 --- D. E2
IC41 ------ E1
IC42 ------ E1
IC43 ------ E1
IC44 --- E1. 2
IC45 ------ E2
IC46 ------ E2
IC47 ------ E2
IC48 ------ E2
IC49 ------ E2
IC50 --- E. F1
IC51 --- E. F1
IC52 --- F1. 2
IC53 --- E. F2
IC56 --- E. F2
IC57 ------ A3
IC58 ------ B3
IC59 --- A3. 4
IC61 ------ B4
IC62 ------ B4
IC63 ------ B4
IC64 ------ B3
IC65 ------ B3
IC66 ------ B4
IC67 ------ B4
IC68 ------ B4
IC69 --- B. C3
IC70 --- B. C3
IC71 --- B. C4
IC72 --- C4. 5
IC73 ------ C3
IC74 ------ C3
IC75 ------ C4
IC76 ------ C4
IC77 ------ C4
IC78 ------ C4
IC79 --- C. D2
IC80 --- C. D3
IC81 --- C. D4
IC82 --- C. D4
IC83 --- C. D4
IC84 --- C. D4
IC85 ------ D3
IC86 --- D3. 4
IC87 ------ D4
IC88 ------ D4
IC89 ------ D4
IC90 ------ D3
IC91 --- D. E3
IC92 ------ D3
IC93 --- D3. 4
IC94 ------ D4
IC95 ------ D4
IC96 ------ D4
IC97 --- D4. 5
IC98 ------ E3
IC99 ------ E3
IC100 ------ E3
IC101 ------ E4
IC102 ------ E4
IC103 ------ E4
IC104 ------ E4
PH1 ------ F2

[TRANSISTOR]

TR1 ------ A3
TR2 ------ B2
TR3 ------ A4
TR4 ------ D3
TR5 ------ D3
TR6 ------ D4
TR7 ------ D4
TR8 ------ D4
TR9 ------ D4
TR10 ------ E3
TR11 ------ E3
TR12 ------ E3
TR13 ------ E3
TR14 ------ A2

[CONNECTOR]

P1 -------- A1
P2 -------- A2
P3 -------- A3
P4 -------- A2
P5 -------- B1
P6 -------- D1
P7 -------- F2
P8 -------- A4
P9 -------- A4
P10 ------- B4
P11 ------- B4
P12 ------- B4
P13 ---- D4. 5
P14 ------- E3
J1 ----- F2. 3
J2 ------ F3. 4
J3 ------ F4
J4 ------ F4

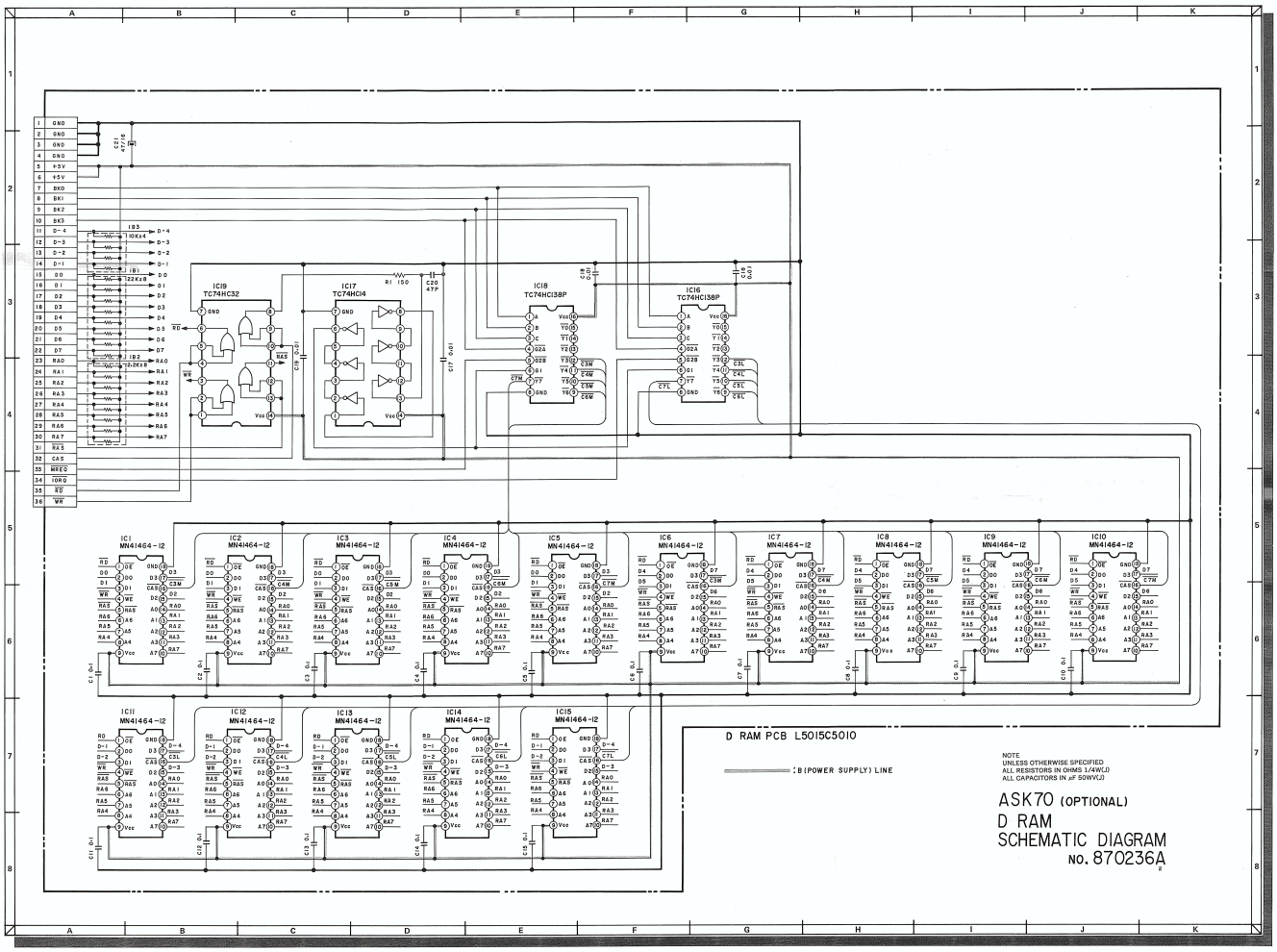
D RAM PCB L50I5C50I0
B (POWER SUPPLY) LINE
NOTE
UNLESS OTHERWISE SPECIFIED
ALL RESISTORS IN OHMS 1/4W(J)
ALL CAPACITORS IN μF 50WV(J)
ASK70 (OPTIONAL)
D RAM
SCHEMATIC DIAGRAM
NO. 870236A

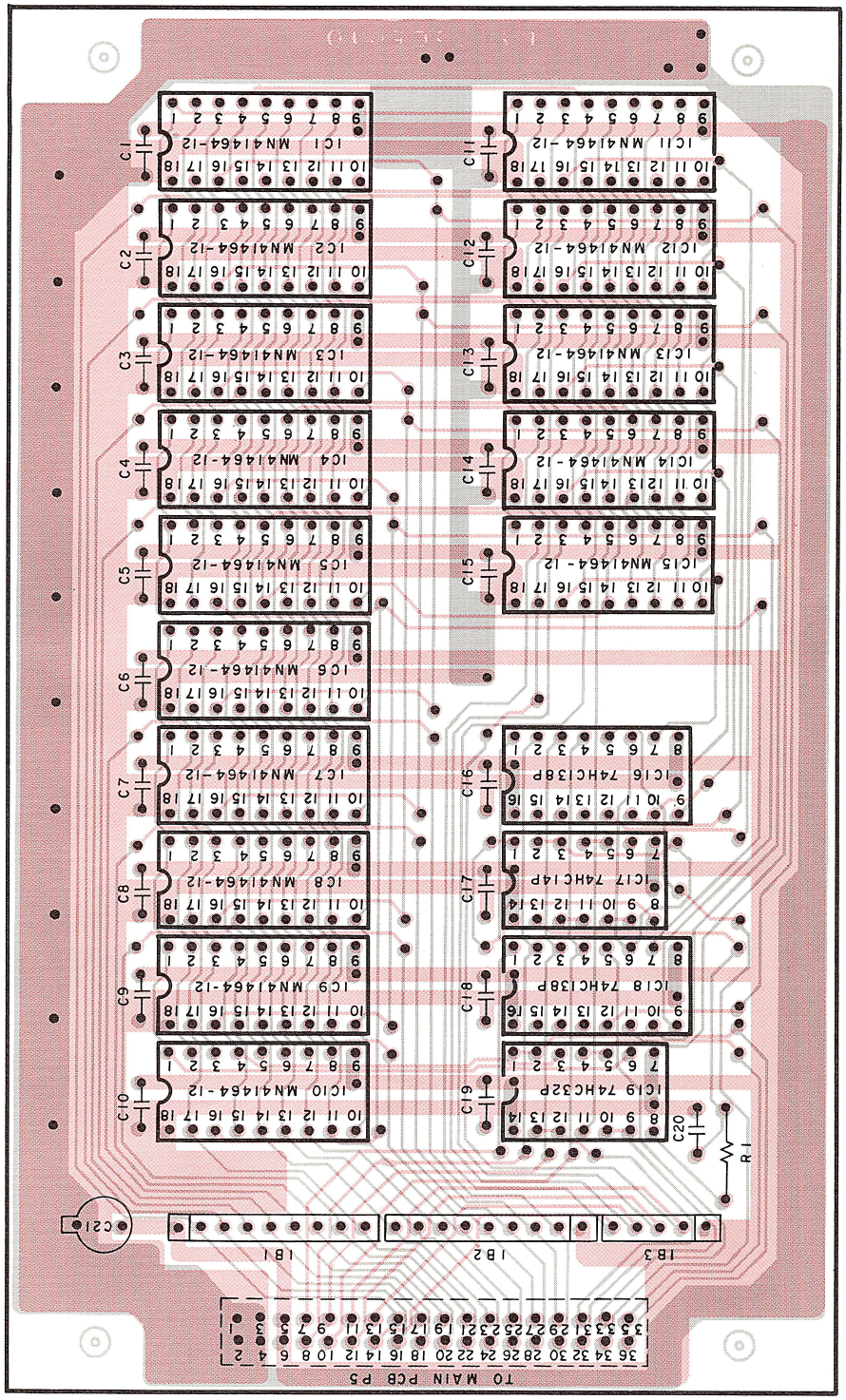

D RAM PCB (OPTIONAL) L5015C5010