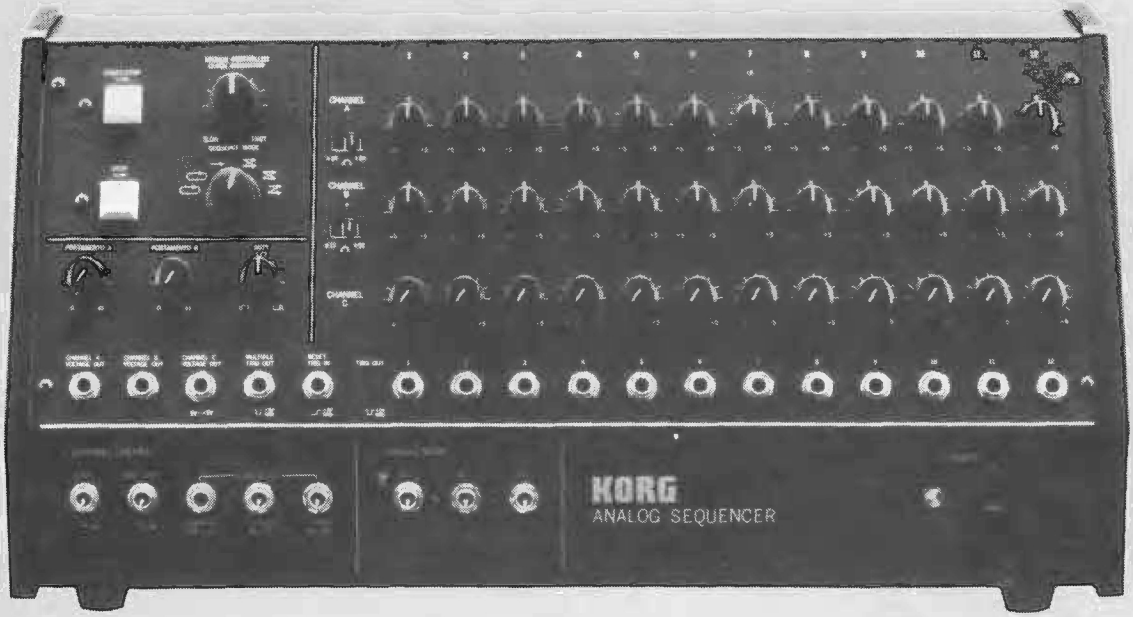
KORG®



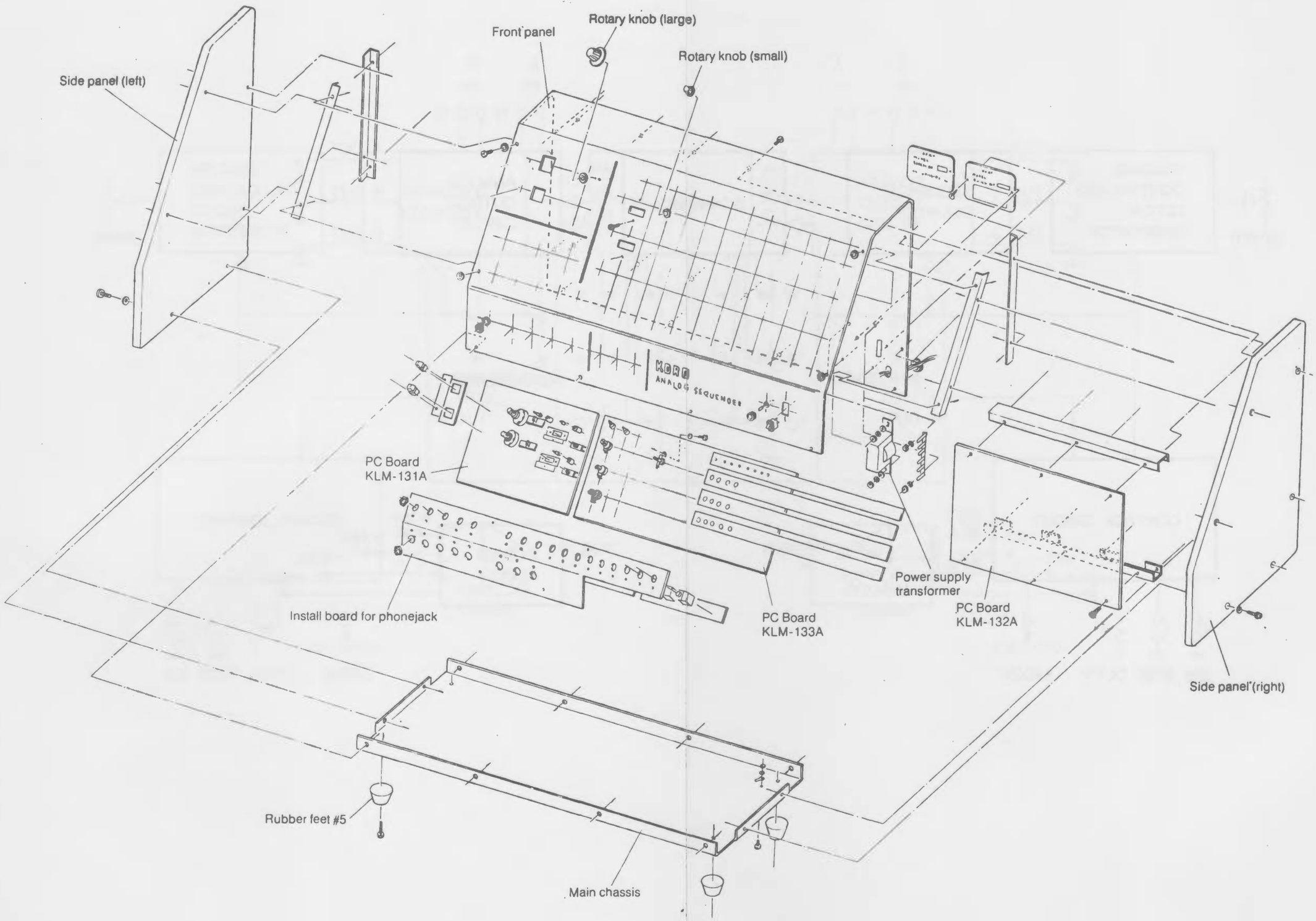
ANALOG SEQUENCER
SERVICE MANUAL

SQ-10

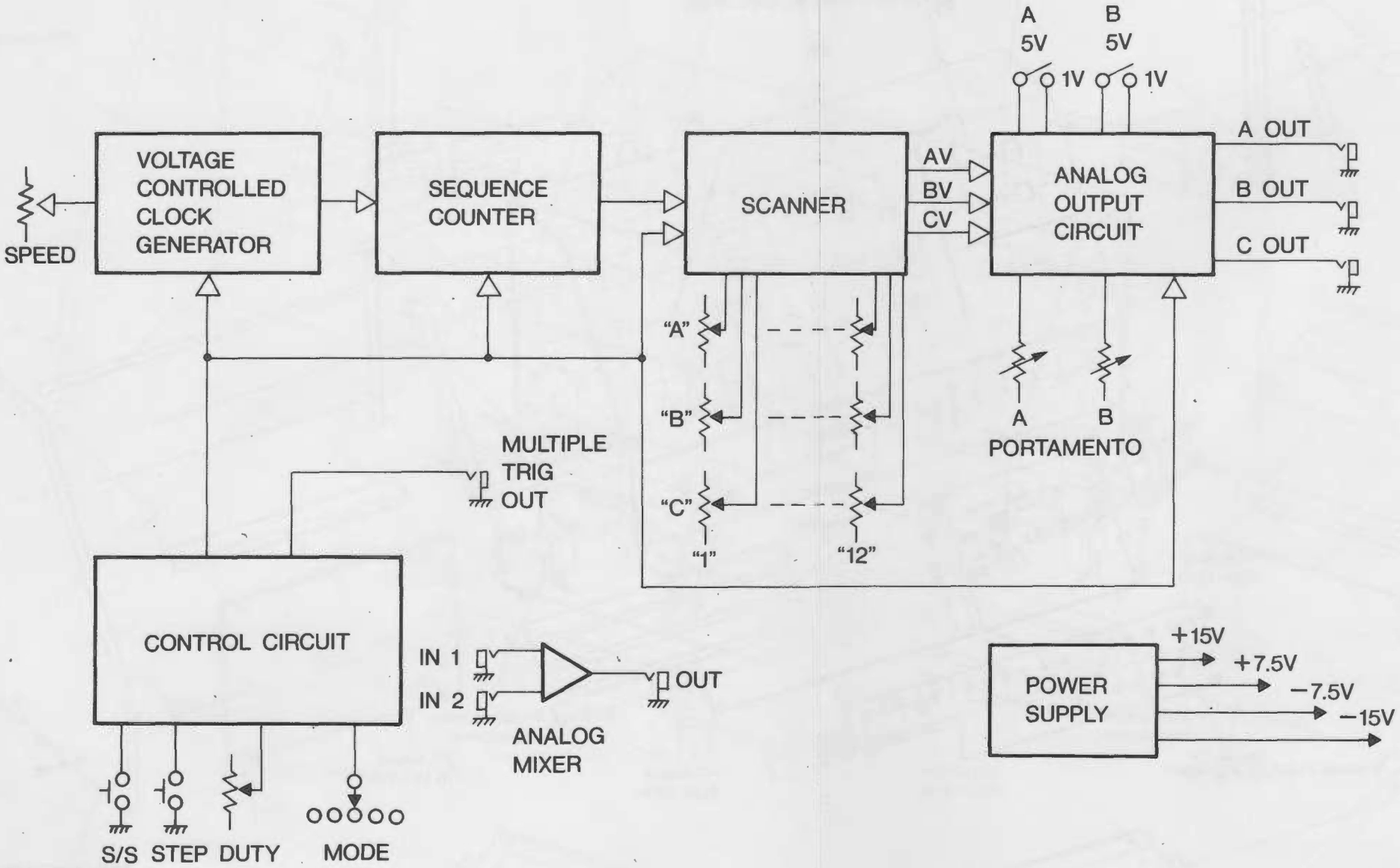
CONTENTS

1. STRUCTURAL DIAGRAM 1
2. BLOCK DIAGRAM 2
3. CIRCIT DIAGRAM 3
4. PC BOARD 4
5. ADJUSTMENT PROCEDURE 6

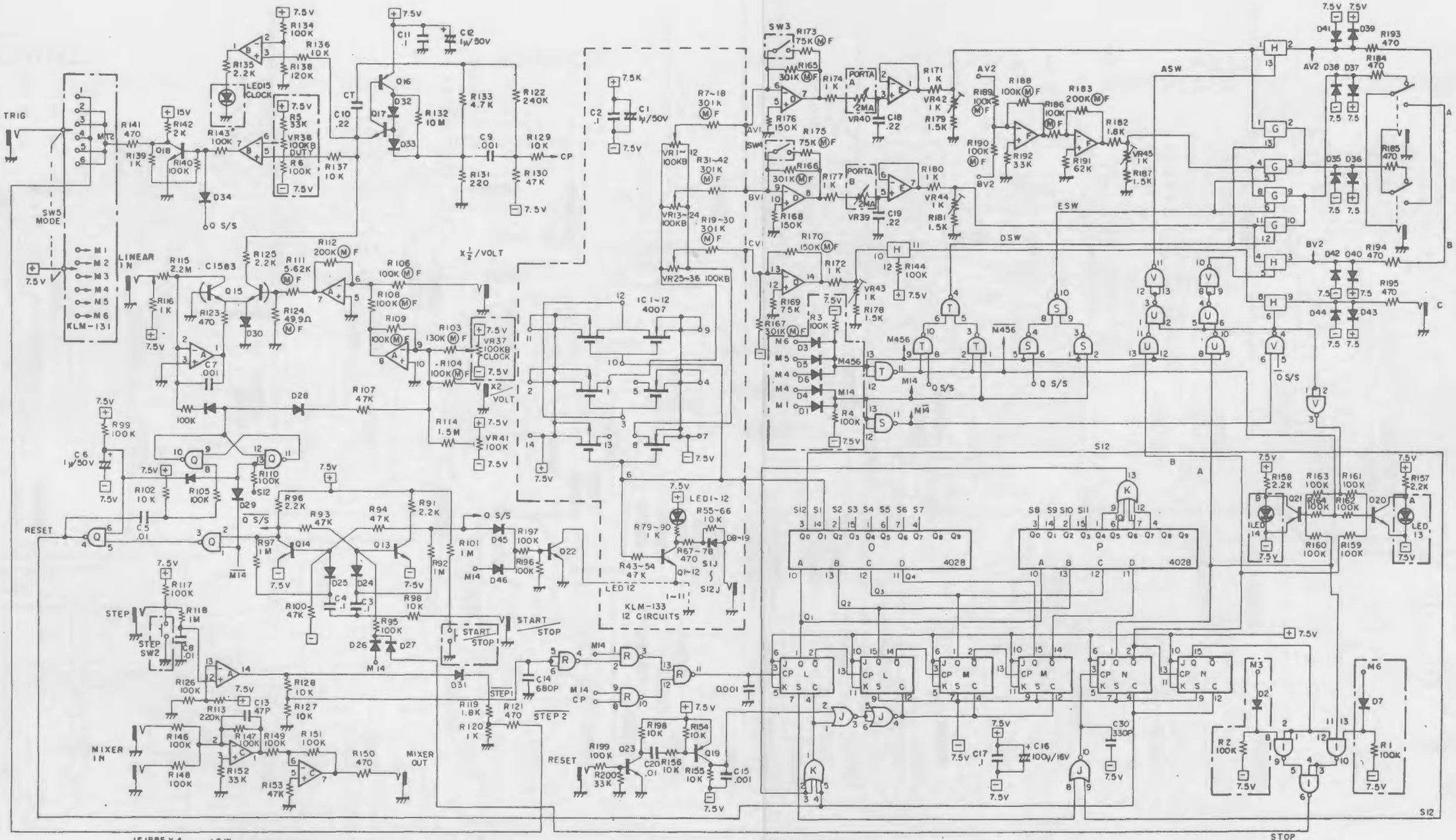
1. STRUCTURAL DIAGRAM

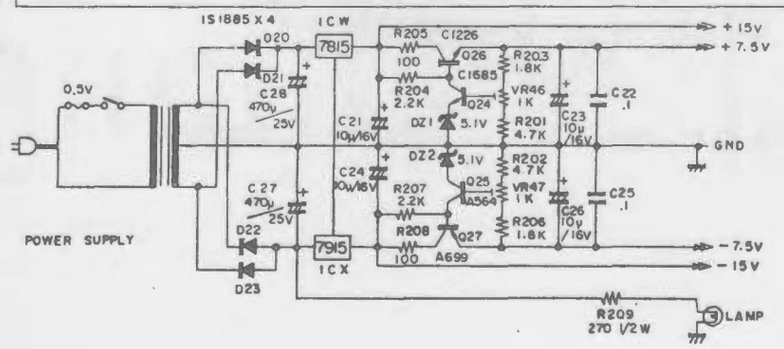


2. BLOCK DIAGRAM



3. CIRCUIT DIAGRAM KLM-132 KLM-133 KLM-131





KLM132 : MAIN CIRCUIT BOARD
KLM133 : SEQUENCE CIRCUIT BOARD
KLM131 : CONTROL CIRCUIT BOARD

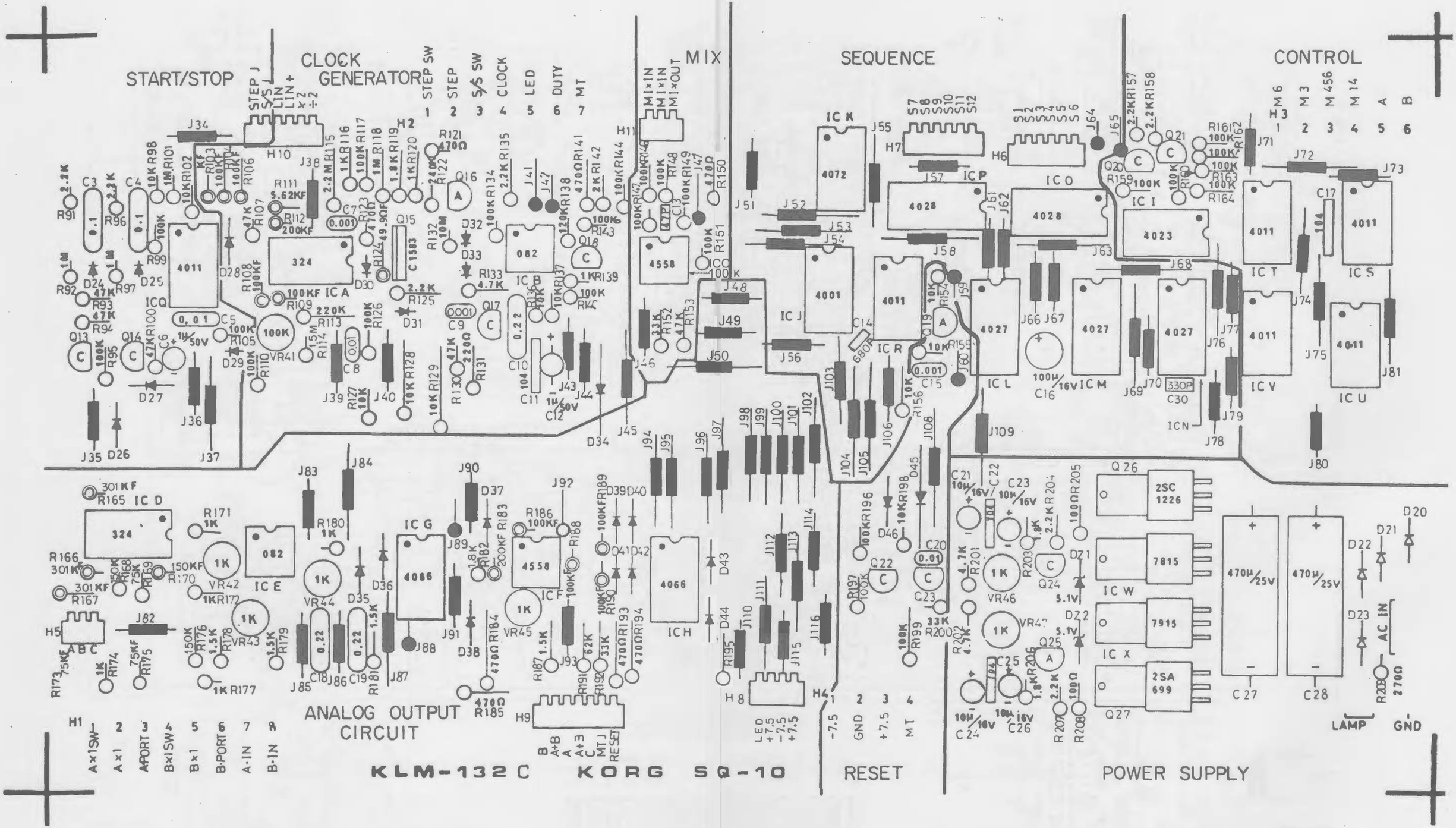
2SA564
2SC1685

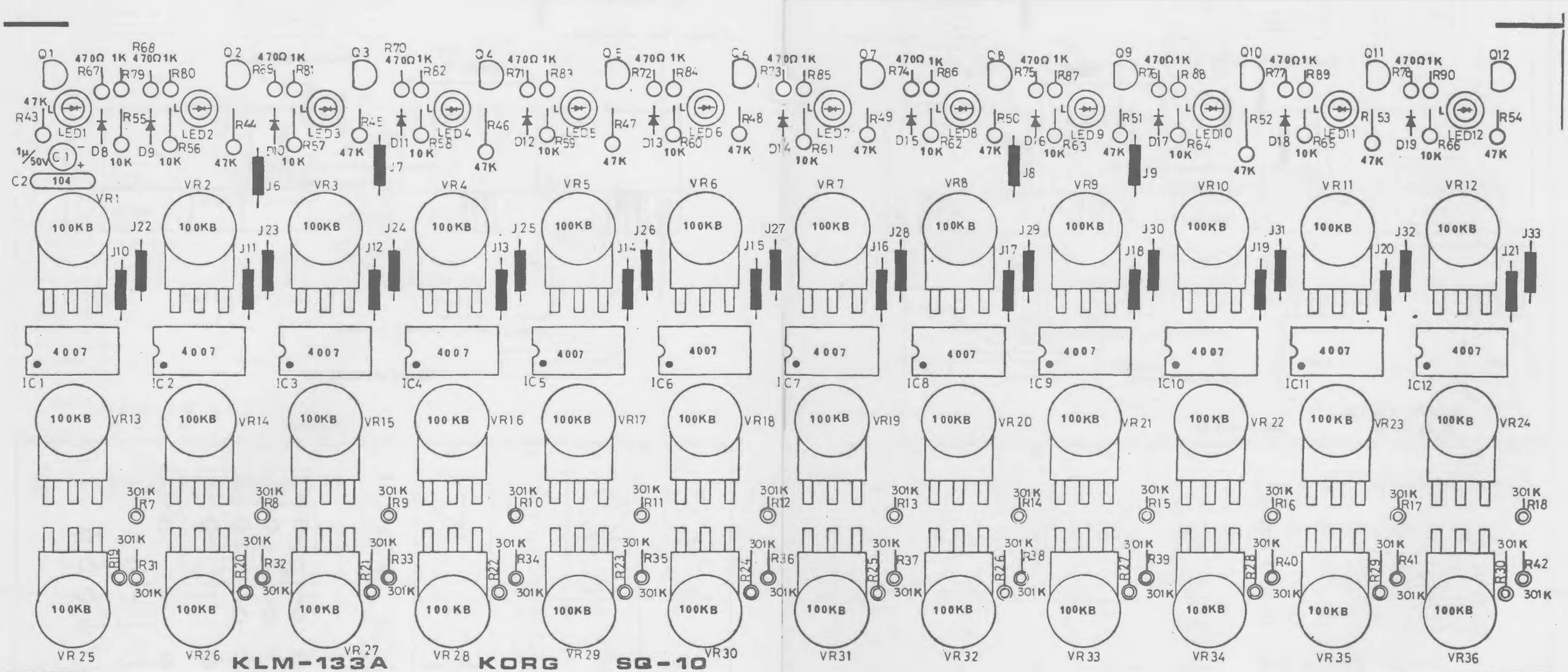
OP Amp : ±15V
ANALOG SW : ±7.5V
DIGITAL IC : ±7.5V

IC CHART

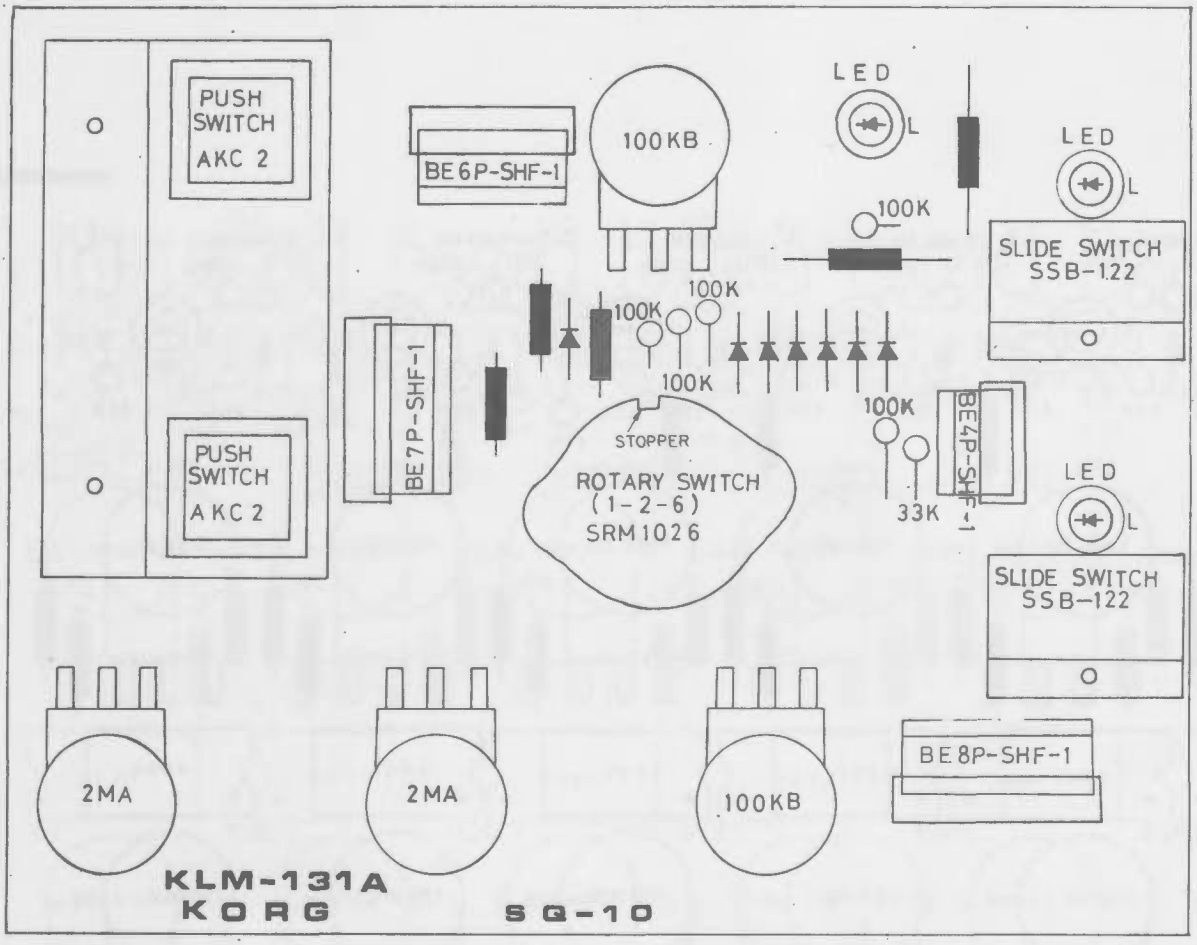
No.	OP	CMOS
A	324	
B	082	
C	4558	
D	324	
E	082	
F	4558	
G		4066
H		4066
I		4023
J		4001
K		4072
L		4027
M		4027
N		4027
O		4028
P		4028
Q		4011
R		4011
S		4011
T		4011
U		4011
V		4011
I~IC		4007

4. P.C. BOARD KLM-132




KLM-133A
KORG
SQ-10

KLM-131

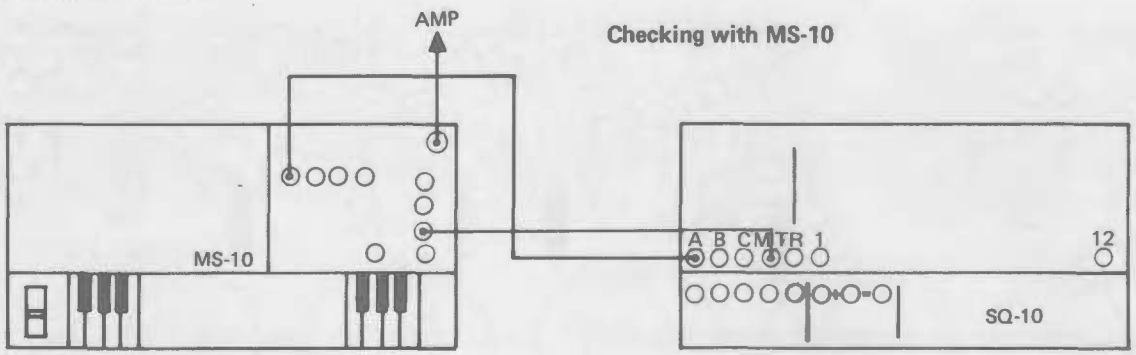

PUSH SWITCH AKC 2
PUSH SWITCH AKC 2
BE6P-SHF-1
100KB
LED
L
LED
L
100K
SLIDE SWITCH SSB-122
100K
100K
100K
BE7P-SHF-1
STOPPER
ROTARY SWITCH (1-2-6) SRM1026
100K
33K
BE4P-SHF-1
LED
L
SLIDE SWITCH SSB-122
2MA
2MA
100KB
BE8P-SHF-1
KLM-131A
KORG
SQ-10

5. ADJUSTMENT PROCEDURE

Power Check & Adjust

1. +15V; Should be 14.4V ~ 15.6V
2. −15V; Should be −14.4V ~ 15.6V.
3. +7.5V; Adjust VR46 to 7.50V.
4. −7.5V; Adjust VR47 to −7.50V.

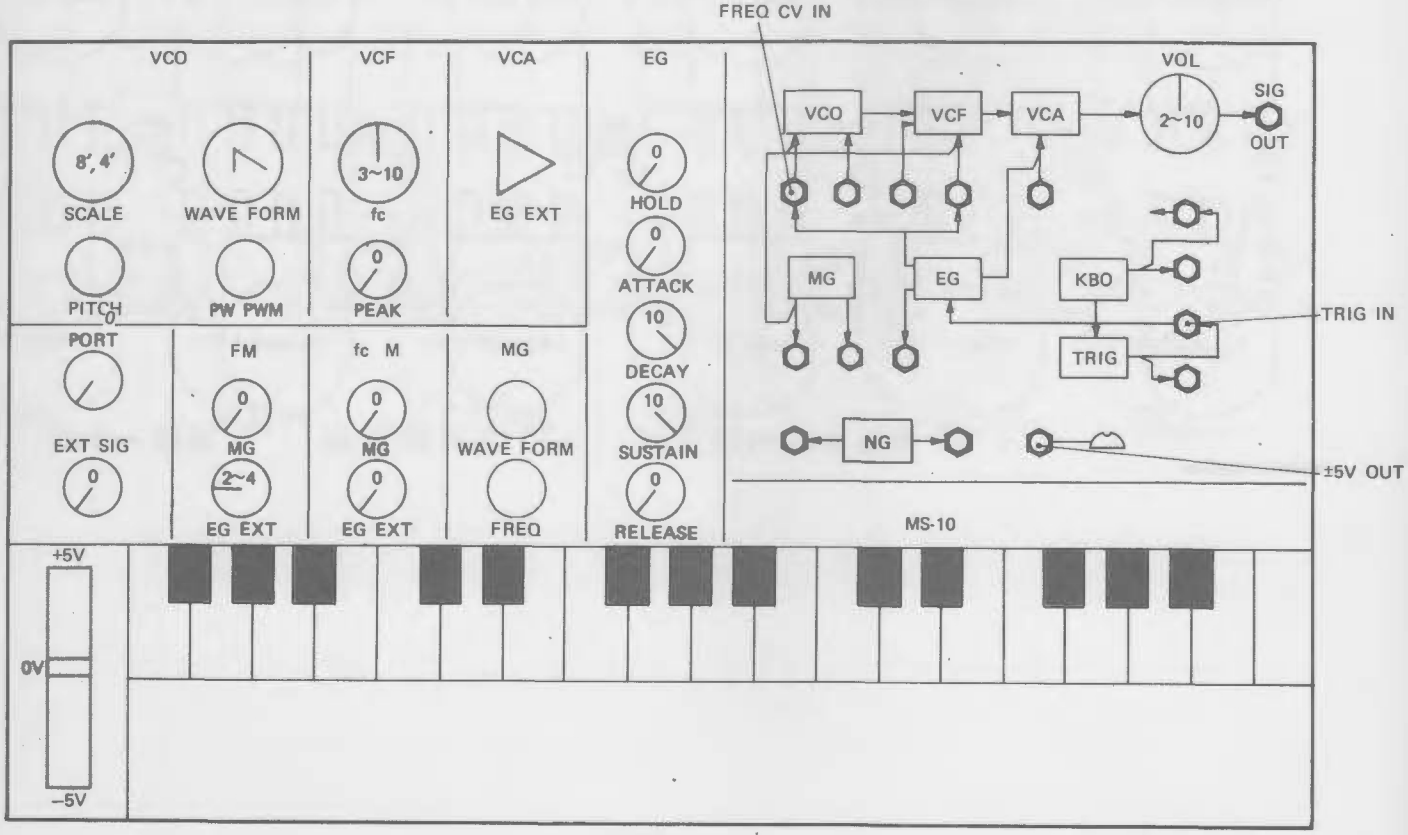
Function Test — Standard —



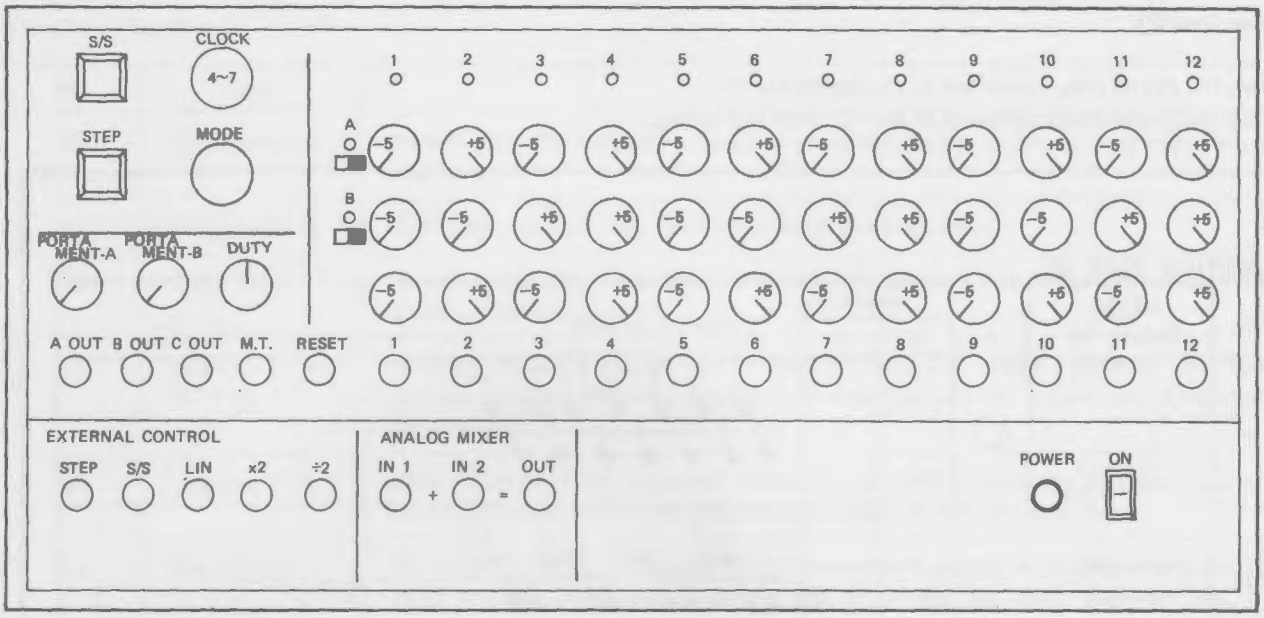
AMP	MS-10	SQ-10
	VCO FREQ CV IN	A OUT
	TRIG IN	MULTIPLE TRIG OUT
INPUT	SIG OUT	

See other chart for MS-10 control settings.

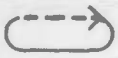
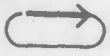
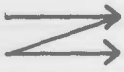
Connect MS-10 (fig. 1)



Set MS-10 and SQ-10 controls (fig. 2)



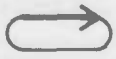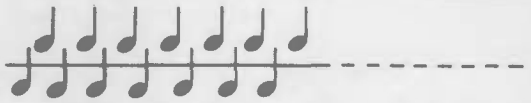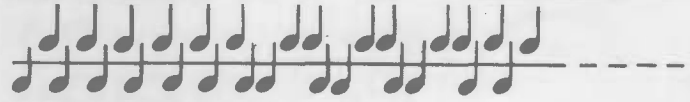
(fig. 3)

No.	Mode Rotary switch	Check
3.		12 LED turns on first. Then 1 and 2 each time step button is pressed, so the sequence goes 12, 1, 2. A and B LED's do not turn on in this mode.
4.		LED's 1 through 12 should be off at first. When S/S switch is pressed, sequence goes 1, 2 . . . . 12, 1, 2 . . . . When S/S switch is pressed again, LED's go out. A and B do not light.
5.		LED's 1 through 12 should be off at first. When you turn on the S/S switch, the sequence should automatically advance 1, 2, . . . 12 . . . and then stop after one time. If you press the S/S switch between 1 and 12, the sequence should stop. A and B do not turn on.
6.		B and 12 are on at first. A and 1 turn on when you first press the Step switch. Press it again for 2 . . . 12; again for B 1 . . . 12; and again for A 1 . . .
7.		A and B and 1 through 12 should all be off at the beginning. When you press the S/S switch, the sequence should go A 1 . . . 12, B 1 . . . 12, A 1 . . . automatically. Press the S/S switch again to stop.
8.		At the beginning A and B and 1 through 12 should all be off. Press the S/S switch and there should be a single cycle of A 1 . . . 12 and B 1 . . . 12. Then it should stop. It should also stop if you press the S/S switch while the LED's are changing.

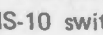
Function Test (2)

0 means the phone plug connected to the MS-10 CV IN.
means the phone plug connected to the opposite side (open).

FUNCTION TEST (2)

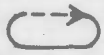
No.	MODE Rotary SW	(output) A	B	C	musical interval
9		○			
10			○		
11				○	
12		○			
13			○		
14		○			
15			○		

Function Test (3)

No.	Item	Check
16.	Portamento-A	Portamento effect should only show up in the channel A output when you turn up this knob.
17.	Portamento-B	Portamento should only show up in the B channel output.
18.	Duty	Should get shorter when knob is turned counterclockwise. Should get longer when turned clockwise.
19.	Reset, Trig Out (1~11)	Connect RESET TRIG IN jack to each of TRIG OUT jacks 1 through 11 in turn, and see that the sequence returns to 1 after reaching the proper step. Disconnect after check.
20.	Trig Out (12)	With TRIG OUT 12 connected to the MS-10 TRIG IN jack, see that there is only a sound produced at the 12th step in a sequence. Disconnect after check.
21.	Step (jack)	Set mode to  . Connect MS-10 momentary switch to STEP jack and see that steps advance when you press the MS-10 switch. Set mode back to  and disconnect after check.
22.	Start/Stop (jack)	Connect MS-10 momentary switch to S/S jack, and see that the MS-10 switch will turn the S/S on and off. Disconnect after check.
23.	Linear In	Connect MS-10 control wheel  out to LINEAR IN jack, and see that the clock speed changes with input voltage. It should get faster toward +5V. Disconnect after check.
24.	x2/V	Connect MS-10  out to x2/V jack, and see that clock speed changes with input voltage. Speed increases towards +5V. Disconnect after check.
25.	+2/V	Connect MS-10  out to +2/V jack, and see that clock speed changes with input voltage. Speed should decrease toward +5V. Disconnect after check.
26.	Clock	Turning the CLOCK knob all the way counterclockwise should slow down the cycle 10 sec. ~ 40 sec. Turning the knob clockwise should speed up the clock.
27.	Analog Mixer	The sum of IN 1 and IN 2 voltages should appear in the OUT voltage. For example: Connect MS-10  out to IN 1; Connect SQ-10 multiple trigger out to IN 2; Connect MS-10 CV IN to OUT.

Multiple trigger signal should modulate pitch of note when keyboard is played (or momentary switch is pressed) on MS-10. Changing IN 1 input voltage (from control wheel) will vary entire pitch.

OUT PUT CHECK

No.	"1" Step VR 3	MODE	5V–1V sw A	5V–1V sw B	Digital volt Mt. A	Digital volt Mt. B	Digital volt Mt. C	Measure step	Limit
28	"1" A B C		5V	5V	○			"1"	+4.90 ~ +5.10V
29			1V		○			"1"	+0.95 ~ +1.05V
30			5V			○		"1"	+4.90 ~ +5.10V
31				1V		○		"1"	+0.95 ~ +1.05V
32				5V			○	"1"	+4.90 ~ +5.10V
33					○			"A" "1"	+4.85 ~ +5.15V
34					○			"B" "1"	+4.85 ~ +5.15V
35	"1" A B C				○			"A" "1"	-4.85 ~ -5.15V
36					○			"B" "1"	-4.85 ~ -5.15V
38					○			"1"	-4.90 ~ -5.10V
37						○		"1"	-4.90 ~ -5.10V
39							○	"1"	-0.10 ~ +0.10V

○ Digital voltmeter to measure the phone jack